SECTION DI
DRIVER INFORMATION SYSTEM

CONTENTS

PRECAUTIONS **3**
Precautions for Supplemental Restraint System (SRS) “AIR BAG” and “SEAT BELT PRE-TENSIONER” 3
COMBINATION METERS **4**
System Description 4
UNIFIED METER CONTROL UNIT 4
POWER SUPPLY AND GROUND CIRCUIT 4
SPEEDOMETER 4
TACHOMETER 4
WATER TEMPERATURE GAUGE 4
FUEL GAUGE 4
ODO/TRIP METER 5
AMBIENT TEMPERATURE INDICATOR 5
Arrangement of Combination Meter 7
Component Parts and Harness Connector Location 8
Schematic 9
Wiring Diagram — METER — 10
AWD MODELS 10
2WD MODELS 12
Terminals and Reference Value for Combination Meter 14
Self-Diagnosis Mode of Combination Meter 14
SELF-DIAGNOSIS FUNCTION 14
OPERATION PROCEDURE 14
Trouble Diagnosis 15
HOW TO PERFORM WITH TROUBLE DIAGNOSIS 15
PRELIMINARY CHECK 15
SYMPTOM CHART 15
Power Supply and Ground Circuit Inspection 16
Vehicle Speed Signal Inspection (With VDC) 16
Vehicle Speed Signal Inspection (Without VDC) ... 16
Engine Speed Signal Inspection 17
Engine Coolant Temperature Signal Inspection 17
Fuel Level Sensor Inspection 17
Fuel Gauge Pointer Fluctuates, Indicator Wrong Value or Varies 19
Fuel Gauge Does Not Move to FULL Position 19
Ambient Temperature Signal Inspection [Without Auto A/C] 20
Ambient Temperature Signal Inspection [With Auto A/C] 21
Electrical Components Inspection 22
FUEL LEVEL SENSOR UNIT CHECK 22
AMBIENT SENSOR CHECK 22
Removal and Installation for Combination Meter ... 23
REMOVAL 23
INSTALLATION 23
Disassembly and Assembly for Combination Meter... 23
DISASSEMBLY 23
ASSEMBLY 23
WARNING LAMPS **24**
Schematic 24
Wiring Diagram — WARN — 25
AWD MODELS 25
2WD MODELS 31
Electrical Components Inspection 37
OIL PRESSURE SWITCH CHECK 37
DIODE CHECK 37
A/T INDICATOR **38**
Wiring Diagram — AT/IND — 38
AWD MODELS 38
2WD MODELS 39
A/T Indicator Does Not Illuminate 40
WARNING CHIME **41**
System Description 41
POWER SUPPLY AND GROUND CIRCUIT 41
IGNITION KEY WARNING CHIME 41
LIGHT WARNING CHIME 41
SEAT BELT WARNING CHIME 41
Component Parts and Harness Connector Location.. 42
Schematic 43
Wiring Diagram — CHIME — 44
Terminals and Reference Value for Smart Entrance Control Unit 47
Trouble Diagnosis 47
HOW TO PERFORM WITH TROUBLE DIAGNOSIS 47
SYMPTOM CHART 47

Power Supply and Ground Circuit Inspection 47
Front Door Switch (Driver Side) Inspection 48
Lighting Switch Input Signal Inspection 50
Key Switch Insert Signal Inspection 50
Seat Belt Buckle Switch Input Signal Inspection [Without Power Seat] 51
Seat Belt Buckle Switch Input Signal Inspection [With Power Seat] 53
CAN COMMUNICATION 55
System Description 55
CAN Communication Unit 55
CLOCK 56
Wiring Diagram — CLOCK — 56

PRECAUTIONS

PFP:00011

Precautions for Supplemental Restraint System (SRS) “AIR BAG” and “SEAT BELT PRE-TENSIONER”

AKS00B9V

The Supplemental Restraint System such as “AIR BAG” and “SEAT BELT PRE-TENSIONER”, used along with a front seat belt, helps to reduce the risk or severity of injury to the driver and front passenger for certain types of collision. Information necessary to service the system safely is included in the SRS and SB section of this Service Manual.

WARNING:

- **To avoid rendering the SRS inoperative, which could increase the risk of personal injury or death in the event of a collision which would result in air bag inflation, all maintenance must be performed by an authorized NISSAN/INFINITI dealer.**
- **Improper maintenance, including incorrect removal and installation of the SRS, can lead to personal injury caused by unintentional activation of the system. For removal of Spiral Cable and Air Bag Module, see the SRS section.**
- **Do not use electrical test equipment on any circuit related to the SRS unless instructed to in this Service Manual. SRS wiring harnesses can be identified by yellow and/or orange harnesses or harness connectors.**

COMBINATION METERS

PFP:24814

System Description

AKS00B9X

UNIFIED METER CONTROL UNIT

- Speedometer, odo/trip meter, tachometer, fuel gauge and water temperature gauge are controlled by the unified meter control unit, which is built into the combination meter.
- Digital meter is adopted for odo/trip meter, ambient temperature indicator and clock.
- Meter/gauge and odo/trip meter segments can be checked in self-diagnosis mode.

POWER SUPPLY AND GROUND CIRCUIT

Power is supplied at all times

- through 10 A fuse [No. 28, located in the fuse block (J/B)]
- to combination meter terminal 1.

With the ignition switch in the ON or START position, power is supplied

- through 10 A fuse [No. 11, located in the fuse block (J/B)]
- to combination meter terminal 2.

Ground is supplied

- to combination meter terminal 21
- through grounds M27 and M70.

SPEEDOMETER

VDC/TCS/ABS control unit [with VDC] or ABS actuator and electric unit (control unit) [without VDC] provides a vehicle speed signal to the combination meter for the speedometer with CAN communication line.

TACHOMETER

The tachometer indicates engine speed in revolutions per minute (rpm).
ECM provides an engine speed signal to combination meter for tachometer with CAN communication line.

WATER TEMPERATURE GAUGE

The water temperature gauge indicates the engine coolant temperature.
ECM provides an engine coolant temperature signal to combination meter for water temperature gauge with CAN communication line.

FUEL GAUGE

The fuel gauge indicates the approximate fuel level in the fuel tank.
Combination meter reads a resistor signal from fuel level sensor unit.
Signal is supplied

- from grounds M27 and M70
- through fuel level sensor unit terminals 1 and 4
- through sub fuel level sensor unit terminals 3 and 1
- to combination meter terminal 8.

ODO/TRIP METER

The vehicle speed signal and the memory signals from the meter memory circuit are processed by the combination meter and the mileage is displayed.

How to Change The Display

Depressing the odo/trip meter switch toggles the mode in the following order.

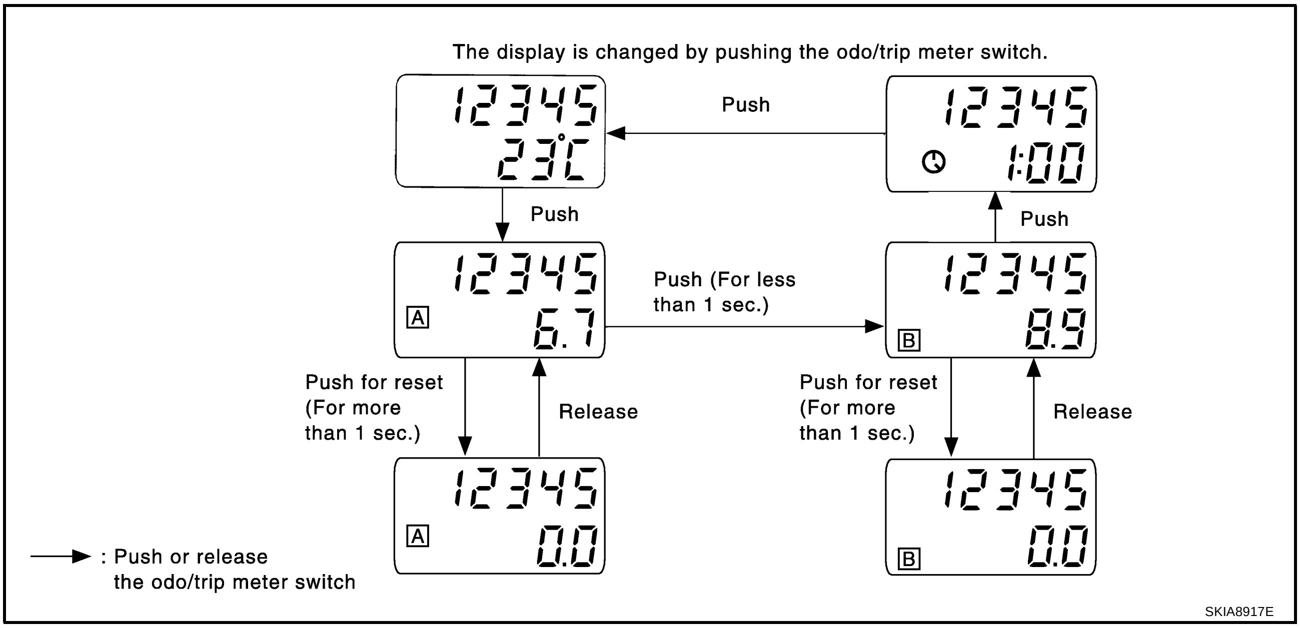

- The odo/trip meter display mode toggling and trip display resetting can be identified by the amount of time that elapses from pressing the odo/trip meter switch to releasing it.
- When resetting with “trip A” displayed, only “trip A” display is reset. (The same way for “trip B”.)

NOTE:

The record of the odo meter is kept even if the battery cable is disconnected. The record of the trip meter is erased when the battery cable is disconnected.

AMBIENT TEMPERATURE INDICATOR

Combination meter displays ambient temperature on odo/trip meter.

NOTE:

- Indication range is between -30 and 55 °C (-22 and 131 °F).
- When ambient temperature is less than -30 °C (-22 °F) or more than 55 °C (131 °F), display shows “--- °C”.
- When indicated temperature becomes less than 3 °C (37 °F), ambient temperature indicator flashes as a sign of warning.

Without Auto A/C

Power and ground are supplied

- from combination meter terminal 27
- through ambient sensor terminal 1 and 2
- to combination meter terminal 28

Combination meter reads ambient sensor signal from ambient sensor.

Signal is supplied

- through ambient sensor terminal 1
- to combination meter terminal 27.

With Auto A/C

When combination meter detects an auto A/C recognition signal from A/C auto amp., combination meter changes the ambient temperature indicator to the control for the vehicle with auto A/C.

Signal is supplied

- from A/C auto amp. terminal 28
- to combination meter terminal 29.

Power and ground are supplied

- from A/C auto amp. terminal 9
- through ambient sensor terminal 1and 2
- to combination meter terminal 28 and A/C auto amp. terminal 24

Combination meter reads ambient sensor signal from ambient sensor.

Signal is supplied

- through ambient sensor terminal 1
- to combination meter terminal 27.

Indication When Turning Ignition Switch OFF

- In a case that temperature detected by ambient sensor is higher than indicated temperature before turning ignition switch off.
  - In a case of more than 3.5 hours after turning ignition switch off, temperature detected by ambient sensor is indicated when turning ignition switch on.
  - In a case of less then 3.5 hours after turning ignition switch off, temperature at the time of turning ignition switch off is indicated.
- In a case that temperature detected by ambient sensor is lower than indicated temperature before turning ignition switch off.
  - Temperature detected by ambient sensor is indicated when turning ignition switch on.

Indication During Running

Though temperature detected by ambient sensor temporarily changed, indicating temperature continentally indicates.

- In a case that temperature detected by ambient sensor is higher than indicated temperature.
  - If vehicle speed is more than 20 km/h (13 MPH), elevation of indicating temperature is limited according to the speed until temperature detected by ambient sensor is indicated.

    NOTE:
    Vehicle speed 20 km/h (13 MPH): 256 sec., 25 km/h (16 MPH): 238 sec., 35 km/h (22 MPH): 200 sec., 50 km/h (31 MPH): 144 sec., 65 km/h (40 MPH): 88 sec., more than 80 km/h (50 MPH): 32 sec.
  - If vehicle speed is more than 20 km/h (13 MPH), and that temperature detected by ambient sensor becomes 8 °C (46 °F) more than indicating temperature, indicating temperature will be elevated unit the degree becomes same as temperature detected by ambient sensor with limiting elevation of indicating temperature 1 °C par a minute.
  - If vehicle speed is less than 20 km/h (13 MPH), indicating temperature is continually kept.
- In a case that temperature detected by ambient sensor is lower than indicated temperature.
  - Temperature detected by ambient sensor is indicated during running.

Arrangement of Combination Meter

AKS00BA1

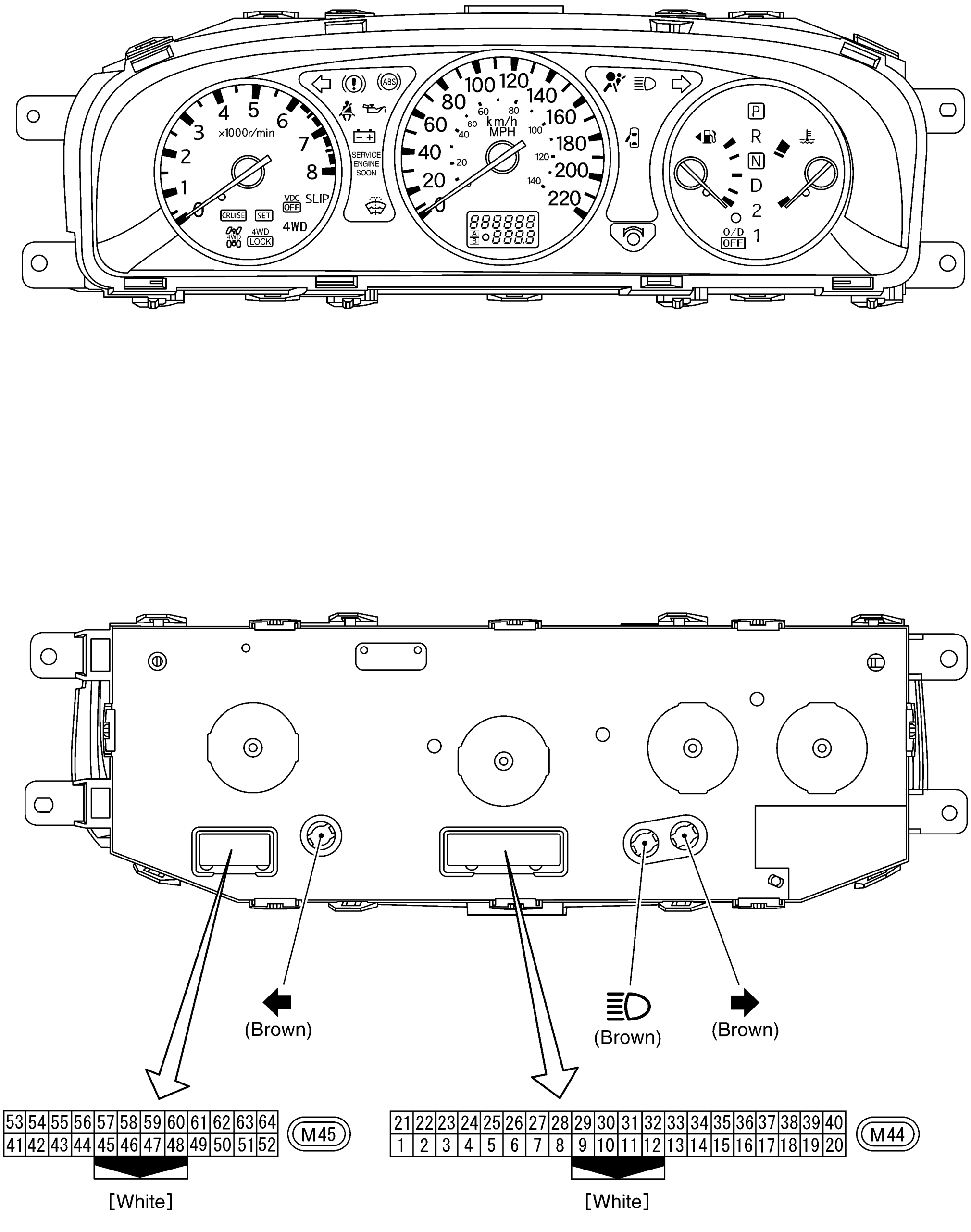

Bulb socket color	Bulb wattage
Brown	1.4W

( ) : Bulb socket color

SKIB0505E

Component Parts and Harness Connector Location

AKS00BA0

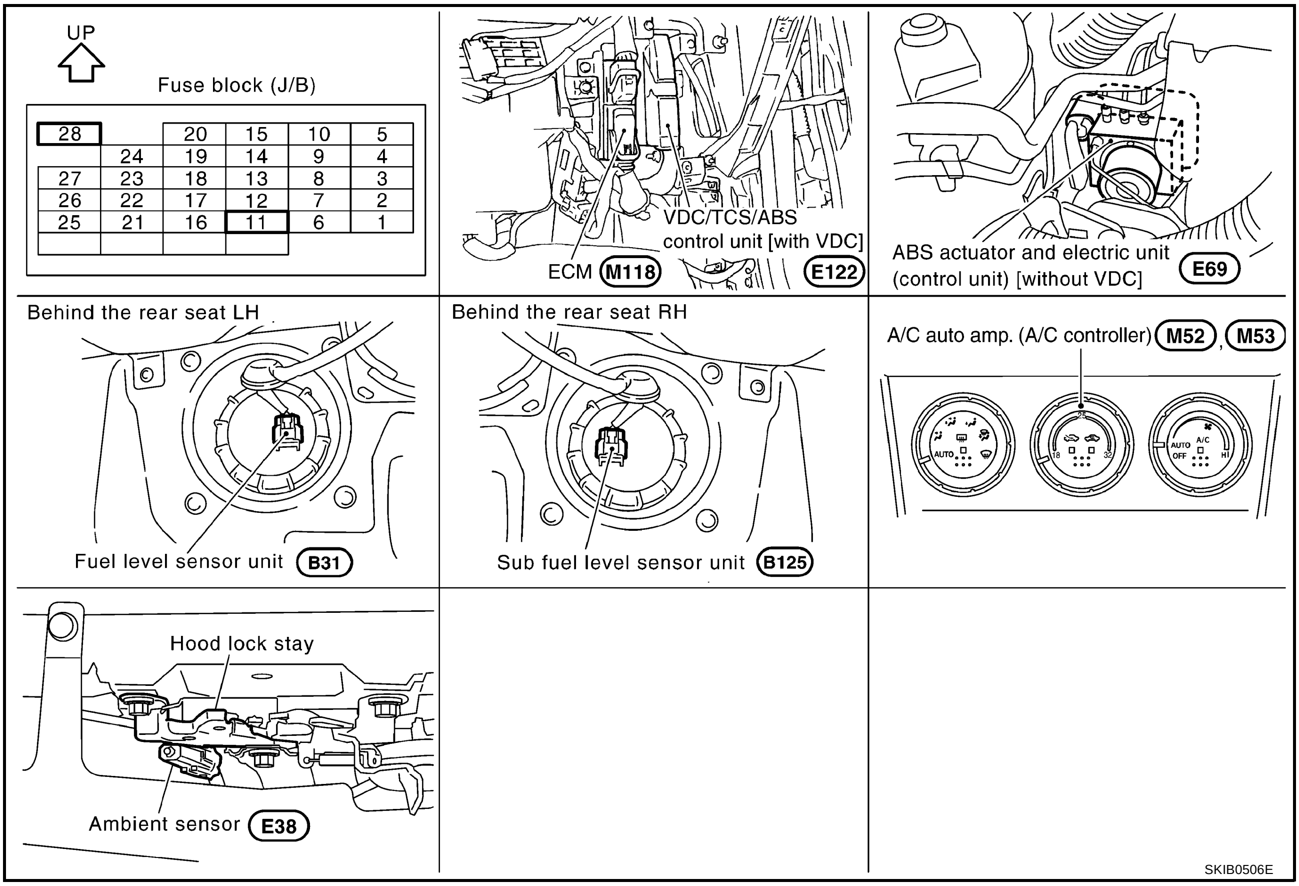

Schematic

AKS00BA2

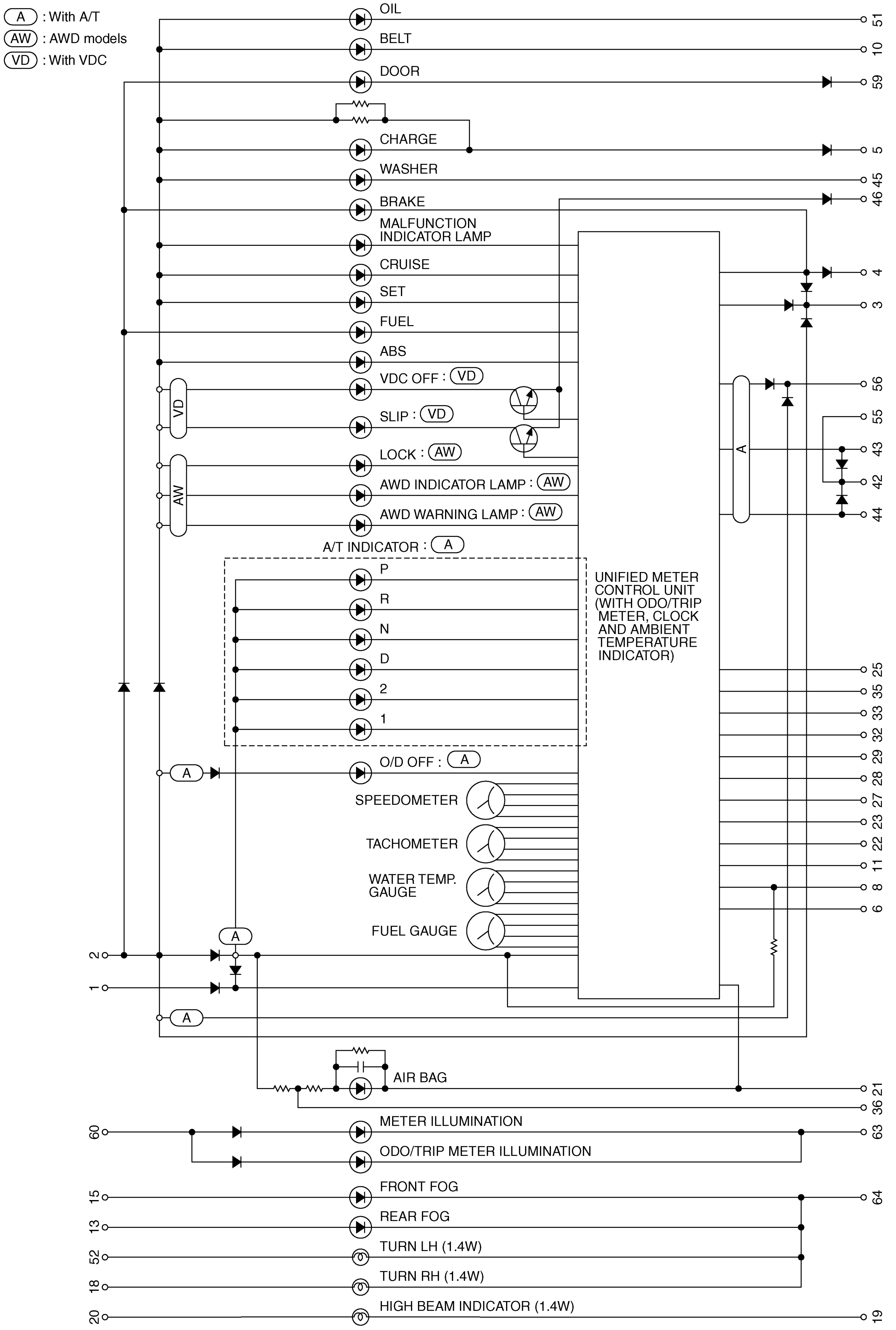

TKWB2259E

A B C D E F G H I J DI L M

Wiring Diagram — METER —

AKS00BA3

AWD MODELS

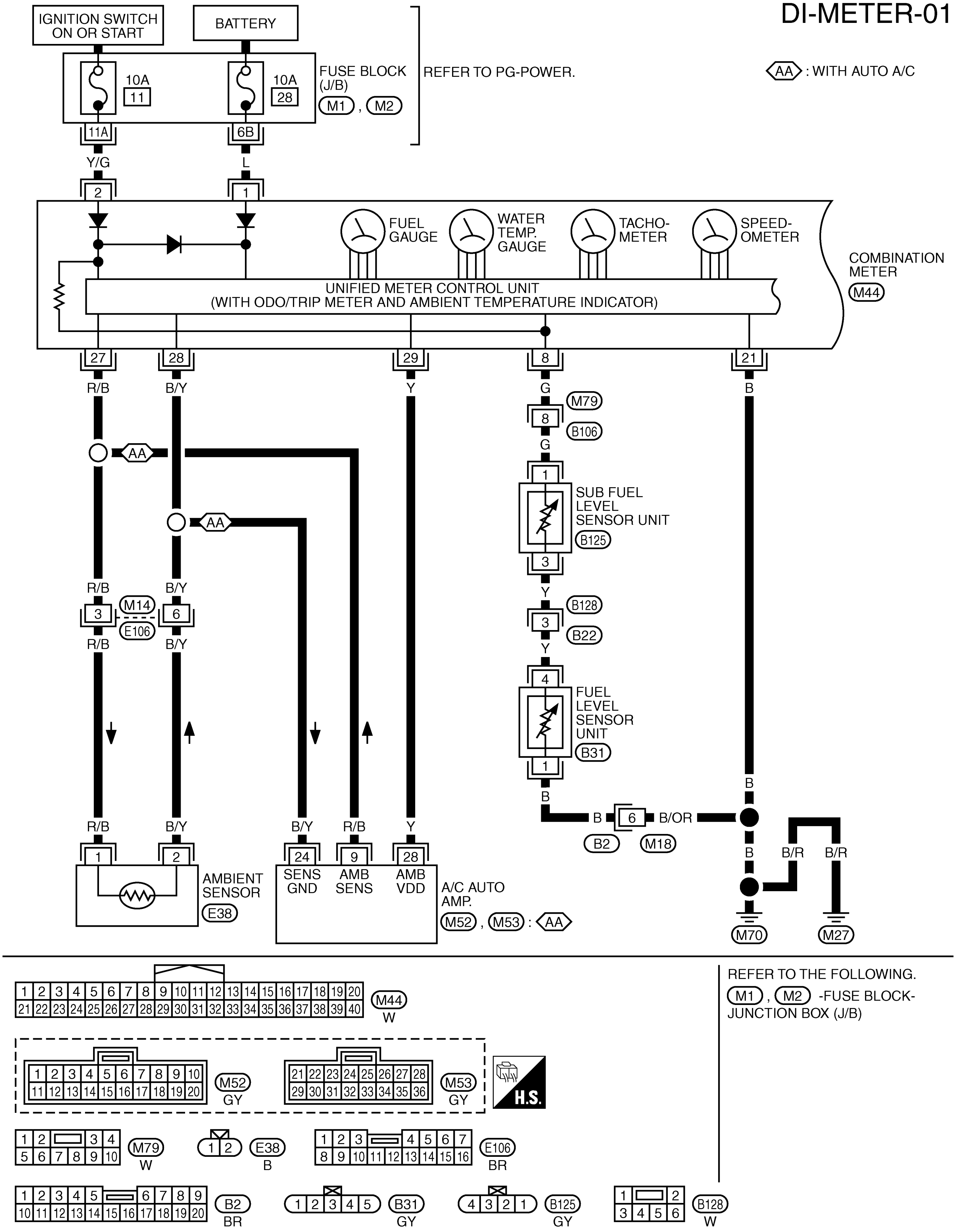

TKWB2260E

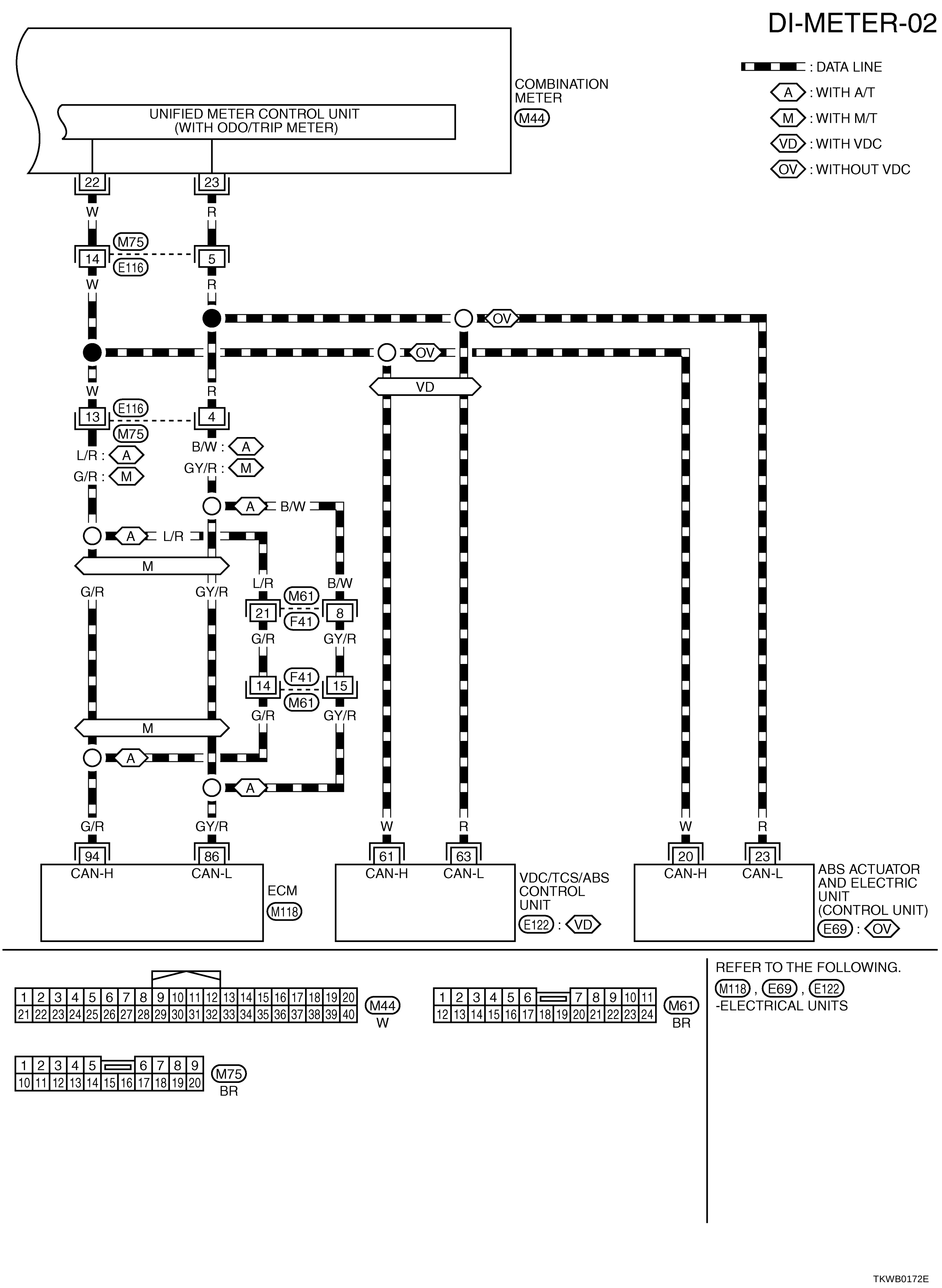

A B C D E F G H I J DI L M

2WD MODELS

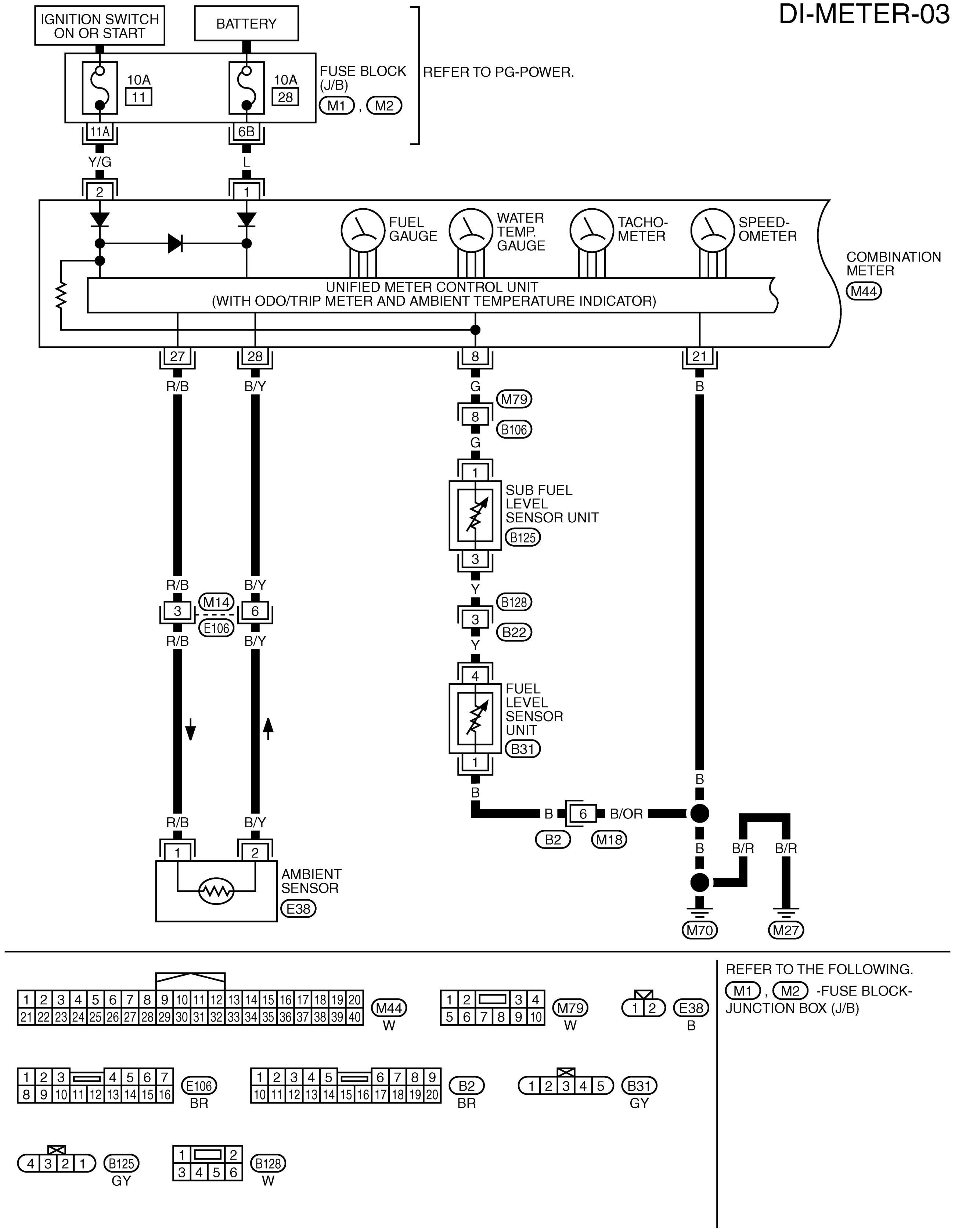
DI-METER-03
IGNITION SWITCH ON OR START
BATTERY
10A
11
10A
28
FUSE BLOCK (J/B)
M1 , M2
REFER TO PG-POWER.
11A
6B
Y/G
L
2
1
FUEL GAUGE
WATER TEMP. GAUGE
TACHO-METER
SPEED-OMETER
COMBINATION METER
M44
UNIFIED METER CONTROL UNIT (WITH ODO/TRIP METER AND AMBIENT TEMPERATURE INDICATOR)
27
28
8
21
R/B
B/Y
G
B
M79
B106
SUB FUEL LEVEL SENSOR UNIT
B125
Y
B128
B22
M14
E106
FUEL LEVEL SENSOR UNIT
B31
B/OR
B2
M18
B/R
AMBIENT SENSOR
E38
M70
M27
M44 W
M79 W
E38 B
E106 BR
B2 BR
B31 GY
B125 GY
B128 W
REFER TO THE FOLLOWING.
M1 , M2 -FUSE BLOCK-JUNCTION BOX (J/B)
TKWB2261E

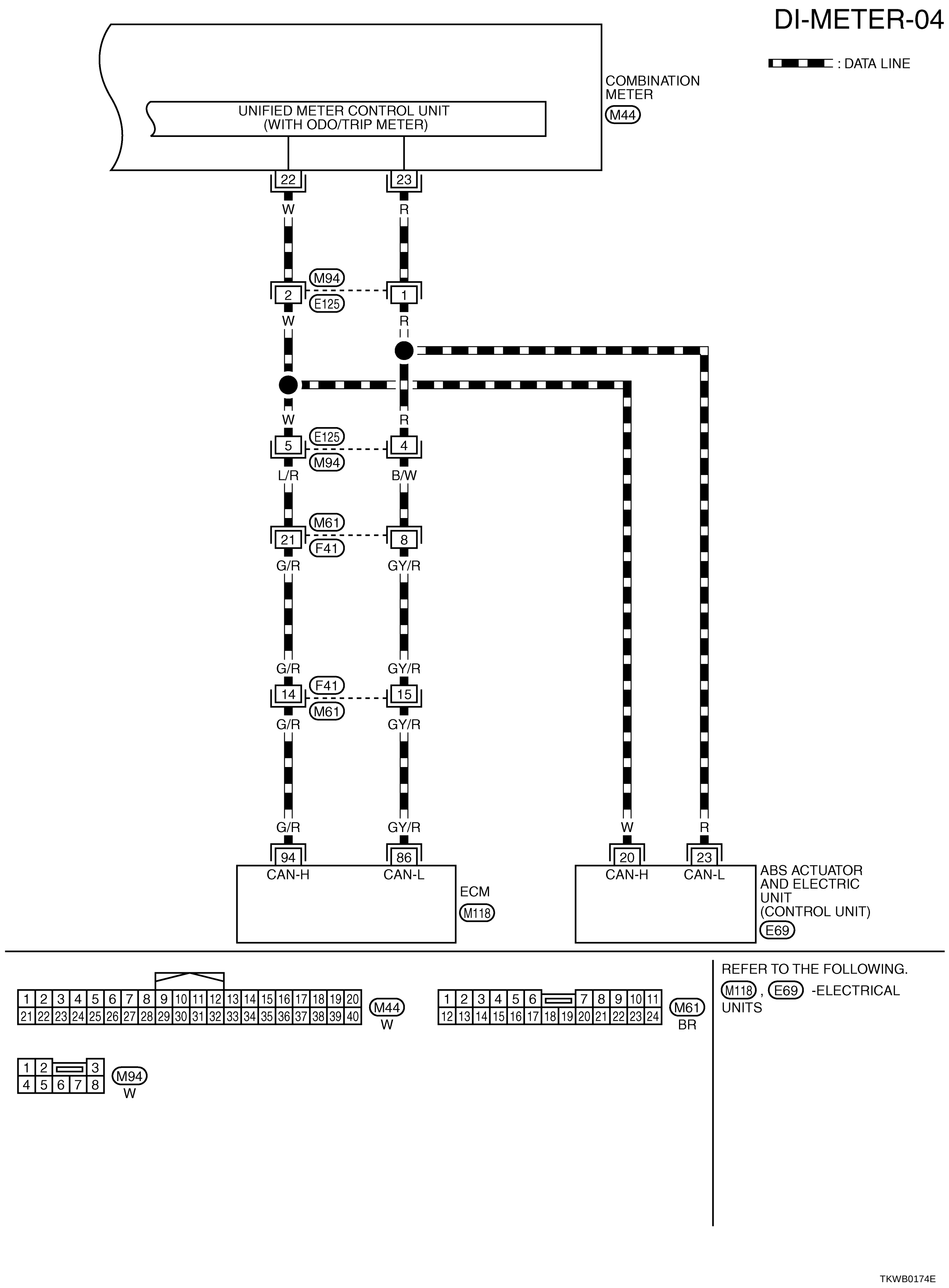
DI-METER-04
: DATA LINE
COMBINATION METER
M44
UNIFIED METER CONTROL UNIT (WITH ODO/TRIP METER)
22
23
W
R
M94
E125
2
1
5
4
L/R
B/W
M61
F41
21
8
G/R
GY/R
14
15
94
86
CAN-H
CAN-L
ECM
M118
20
23
ABS ACTUATOR AND ELECTRIC UNIT (CONTROL UNIT)
E69
M44 W
M61 BR
M94 W
REFER TO THE FOLLOWING.
M118, E69 -ELECTRICAL UNITS
TKWB0174E

Terminals and Reference Value for Combination Meter

AKS00BA6

Terminal No.	Wire Color	Item	Condition		Reference Value (Approx.)
			Ignition switch	Operation or condition	
1	L	Battery power supply	OFF	—	Battery voltage
2	Y/G	Ignition power supply	ON	—	Battery voltage
8	G	Fuel level sensor signal	—	—	Refer to DI-22, "FUEL LEVEL SENSOR UNIT CHECK" .
21	B	Ground	ON	—	0 V
22	W	CAN-H	—	—	—
23	R	CAN-L	—	—	—
27	R/B	Ambient sensor signal	—	—	Refer to DI-22, "AMBIENT SENSOR CHECK"
28	B/Y	Ambient sensor ground	ON	—	0 V
29*1	Y	Auto A/C recognition signal	ON	—	5 V

NOTE:
*1:With auto A/C

Self-Diagnosis Mode of Combination Meter

AKS00BA7

SELF-DIAGNOSIS FUNCTION

- Odo/trip meter segment can be checked in self-diagnosis mode.
- Meters/gauges can be checked in self-diagnosis mode.

OPERATION PROCEDURE

1. Turn the ignition switch ON, and switch the odo/trip meter to “trip A” or “trip B”.
   NOTE:
   If the diagnosis function is activated with “trip A” displayed, the mileage on “trip A” will indicate 0.0 mile, but the actual trip mileage will be retained. (The same way for “trip B”.)
2. Turn ignition switch OFF.
3. While pushing the odo/trip meter switch, turn ignition switch ON again.
4. Make sure that the trip meter displays “0.0”.
5. Push the odo/trip meter switch at least 3 times. (Within 7 seconds after the ignition switch is turned ON.)
6. All the segments on the odo/trip meter illuminate, and simultaneously the low-fuel warning lamp indicator illuminates. At this time, the unified meter control unit is turned to self-diagnosis mode.
   NOTE:
   - Check combination meter power supply and ground circuit when self-diagnosis mode of combination meter does not start. Replace combination meter if normal.
   - If any of the segments is not displayed, replace combination meter.

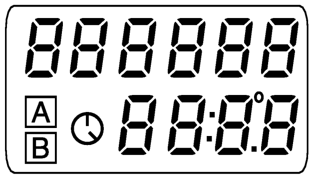

SKIA8920E

7. Each meter activates during pressing odo/trip meter switch. (Then low-fuel warning lamp turns OFF.)

   NOTE:
   If any of the meter and gages is not activated, replace combination meter.

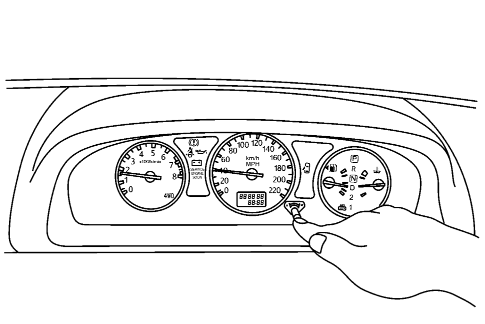

SKIB0507E

Trouble Diagnosis

AKS00BQ6

HOW TO PERFORM WITH TROUBLE DIAGNOSIS

1. Confirm the symptom or customer complaint.
2. Perform preliminary check. Refer to DI-15, "PRELIMINARY CHECK" .
3. According to the symptom chart, make sure cause of the symptom and repair or replace applicable parts. Refer to DI-15, "SYMPTOM CHART" .
4. Does the meter operate normally? If so, GO TO 5. If not, GO TO 2.
5. INSPECTION END

PRELIMINARY CHECK

1. CHECK COMBINATION METER (SELF-DIAGNOSIS MODE)

Perform self-diagnosis mode of combination. Refer to DI-14, "Self-Diagnosis Mode of Combination Meter" .

Does self-diagnosis mode operate normally?

YES >> INSPECTION END
NO >> GO TO 3.

2. CHECK POWER SUPPLY AND GROUND CIRCUIT OF COMBINATION METER

Check power supply and ground circuit of combination meter.

OK or NG

OK >> Replace combination meter.
NG >> Repair power supply and ground circuit of combination meter.

SYMPTOM CHART

Symptom	Possible cause
Speedometer and odo/trip meter indication are malfunction.	Refer to DI-16, "Vehicle Speed Signal Inspection (With VDC)" or DI-16, "Vehicle Speed Signal Inspection (Without VDC)" .
Tachometer indication is malfunction.	Refer to DI-17, "Engine Speed Signal Inspection" .
Water temperature gauge indication is malfunction.	Refer to DI-17, "Engine Coolant Temperature Signal Inspection" .
Low-fuel warning lamp indication is irregular.	Refer to DI-17, "Fuel Level Sensor Inspection" .
Fuel gauge indication is malfunction.	
Ambient temperature indicator is malfunction.	Refer to DI-20, "Ambient Temperature Signal Inspection [Without Auto A/C]" or DI-21, "Ambient Temperature Signal Inspection [With Auto A/C]" .
A/T position indicator is malfunction.	Refer to DI-40, "A/T Indicator Does Not Illuminate" .

Power Supply and Ground Circuit Inspection

AKS00BAA

1. CHECK FUSE

Check for blown combination meter fuses.

Unit	Power source	Fuse No.
Combination meter	Battery	28
	Ignition switch (ON)	11

OK or NG

OK >> GO TO 2.
NG >> If fuse is blown, be sure to eliminate cause of malfunction before installing new fuse. Refer to PG-51, "FUSE BLOCK - JUNCTION BOX (J/B)" .

2. CHECK POWER SUPPLY CIRCUIT

Check voltage between combination meter and ground.

Terminals			Ignition switch position	
(+)		(–)	OFF	ON
Connector	Terminal (Wire color)			
M44	2 (Y/G)	Ground	0 V	Battery voltage
	1 (L)		Battery voltage	Battery voltage

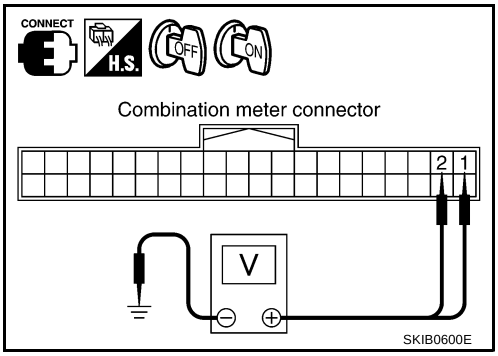

OK or NG

OK >> GO TO 3.
NG >> Repair harness between combination meter and fuse.

3. CHECK GROUND CIRCUIT

1. Turn ignition switch OFF.
2. Disconnect combination meter connector.
3. Check continuity between combination meter harness connector M44 terminal 21 (B) and ground.

21 (B) – Ground : Continuity should exist.

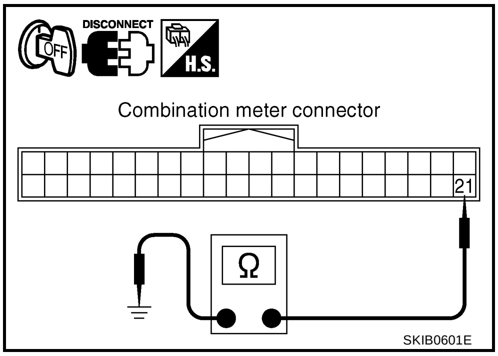

OK or NG

OK >> Power supply and ground circuit is OK.
NG >> Repair ground harness.

Vehicle Speed Signal Inspection (With VDC)

AKS00BLQ

1. CHECK VDC/TCS/ABS CONTROL UNIT (CONSULT-II)

Preform VDC/TCS/ABS control unit self-diagnosis. Refer to BRC-60, "CONSULT-II Functions (ABS)" .

Self-diagnosis results

No malfunction detected>>Replace combination meter.
Malfunction detected>>Check applicable parts, and repair or replace corresponding parts.

Vehicle Speed Signal Inspection (Without VDC)

AKS00BAG

1. CHECK ABS ACTUATOR AND ELECTRIC UNIT (CONSULT-II)

Preform ABS actuator and electric unit self-diagnosis. Refer to BRC-18, "CONSULT-II Functions (ABS)" .

Self-diagnosis results

No malfunction detected>>Replace combination meter.
Malfunction detected>>Check applicable parts, and repair or replace corresponding parts.

Engine Speed Signal Inspection

AKS00BAE

1. CHECK ECM (CONSULT-II)

Perform ECM self-diagnosis. Refer to EC-112, "CONSULT-II Function (ENGINE)" .

Self-diagnosis results

No malfunction detected>>Replace combination meter.
Malfunction detected>>Check applicable parts, and repair or replace corresponding parts.

Engine Coolant Temperature Signal Inspection

AKS00BAF

1. CHECK ECM (CONSULT-II)

Perform ECM self-diagnosis. Refer to EC-112, "CONSULT-II Function (ENGINE)" .

Self-diagnosis results

No malfunction detected>>Replace combination meter.
Malfunction detected>>Check applicable parts, and repair or replace corresponding parts.

Fuel Level Sensor Inspection

AKS00BAC

NOTE:
The following symptoms are not malfunction.

FUEL GAUGE

- Depending on vehicle posture or driving circumstances, fuel level in tank varies, and the pointer may fluctuate.
- If the vehicle is fueled with ignition switch ON, the pointer moves slowly.

LOW-FUEL WARNING LAMP

- Depending on vehicle posture or driving circumstances, fuel level in tank varies, and warning lamp ON timing may change.

1. CHECK HARNESS CONNECTOR

Check combination meter and fuel level sensor unit terminals (meter side, unit side, harness side) for looseness or bent terminals.

OK or NG

OK >> GO TO 2.
NG >> Repair terminal or connector.

2. CHECK COMBINATION METER CIRCUIT

1. Turn ignition switch OFF.
2. Disconnect combination meter connector and sub fuel level sensor unit connector.
3. Check continuity between combination meter harness connector M44 terminal 8 (G) and sub fuel level sensor unit harness connector B125 terminal 1 (G).

   8 (G) – 1 (G) : Continuity should exist.

4. Check continuity between combination meter harness connector M44 terminal 8 (G) and ground.

   8 (G) – Ground : Continuity should not exist.

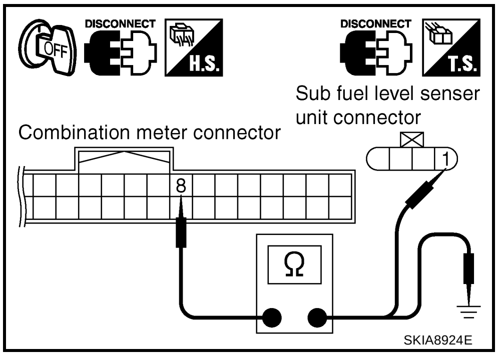

OK or NG

OK >> GO TO 3.
NG >> Repair harness or connector.

3. CHECK FUEL LEVEL SENSOR CIRCUIT

1. Disconnect fuel level sensor unit connector.
2. Check continuity between sub fuel level sensor unit harness connector B125 terminal 3 (Y) and fuel level sensor unit harness connector B31 terminal 4 (Y).

3 (Y) – 4 (Y) : Continuity should exist.

3. Check continuity between sub fuel level sensor unit harness connector B125 terminal 3 (Y) and ground.

3 (Y) – Ground : Continuity should not exist.

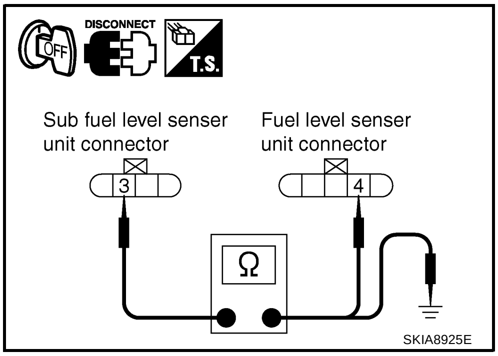

OK or NG

OK >> GO TO 4.
NG >> Repair harness or connector.

4. CHECK GROUND CIRCUIT

Check continuity between fuel level sensor unit harness connector B31 terminal 1 (B) and ground.

1 (B) – Ground : Continuity should exist.

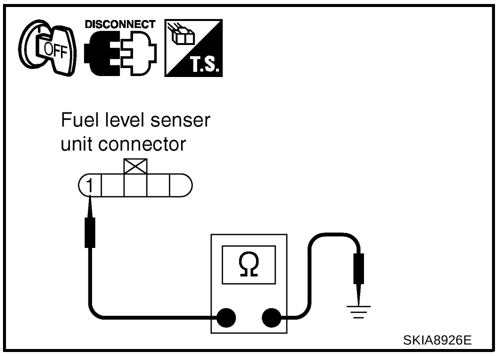

OK or NG

OK >> GO TO 5.
NG >> Repair harness or connector.

5. CHECK FUEL LEVEL SENSOR

Check fuel level sensor units. Refer to DI-22, "FUEL LEVEL SENSOR UNIT CHECK" .

OK or NG

OK >> GO TO 6.
NG >> Replace fuel level sensor unit or sub fuel level sensor unit.

6. CHECK INSTALLATION CONDITION

Check fuel level sensor unit installation, and check whether the float arm interferes or binds with any of the internal components in fuel tank.

OK or NG

OK >> Replace combination meter.
NG >> Install fuel level sensor unit properly.

Fuel Gauge Pointer Fluctuates, Indicator Wrong Value or Varies

AKS00FC6

1. CHECK FUEL GAUGE FLUCTUATION

Test drive vehicle to see if gauge fluctuates only during driving or at the instant of stopping.

Does the indication value vary only during driving or at the instant of stopping?

YES >> The pointer fluctuation may be caused by fuel level change in the fuel tank. Condition is normal.
NO >> Ask the customer about the situation when the symptom occurs in detail, and perform the trouble diagnosis.

Fuel Gauge Does Not Move to FULL Position

AKS00FC7

1. QUESTION 1

Does it take a long time for the pointer to move to FULL position?

YES >> GO TO 2.
NO >> GO TO 3.

2. QUESTION 2

Was the vehicle fueled with the ignition switch ON?

YES >> Be sure to fuel the vehicle with the ignition switch OFF. Otherwise, it will take a long time to move to FULL position because of the characteristic of the fuel gauge.
NO >> GO TO 3.

3. QUESTION 3

Is the vehicle parked on an incline?

YES >> Check the fuel level indication with vehicle on a level surface.
NO >> GO TO 4.

4. QUESTION 4

During driving, does the fuel gauge pointer move gradually toward EMPTY position?

YES >> Check the fuel level sensor unit. Refer to DI-22, "FUEL LEVEL SENSOR UNIT CHECK" .
NO >> The float arm may interfere or bind with any of the components in the fuel tank.

Ambient Temperature Signal Inspection [Without Auto A/C]

AKS00BAJ

1. CHECK VOLTAGE BETWEEN AMBIENT SENSOR HARNESS CONNECTOR AND GROUND

1. Turn ignition switch OFF.
2. Disconnect ambient sensor connector.
3. Turn ignition switch ON.
4. Check voltage between ambient sensor harness connector E38 terminal 1 (R/B) and ground.

1 (R/B) – Ground : Approx. 5 V

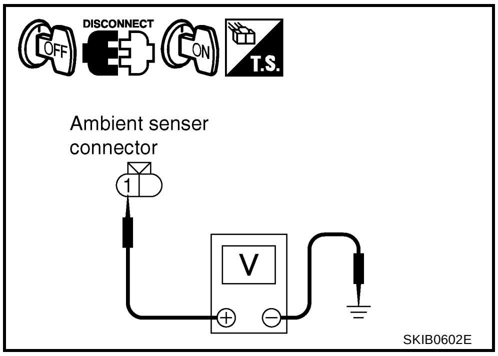

OK or NG

OK >> GO TO 2.
NG >> GO TO 4.

2. CHECK AMBIENT SENSOR CIRCUIT BETWEEN AMBIENT SENSOR AND COMBINATION METER

1. Turn ignition switch OFF.
2. Disconnect combination meter connector.
3. Check continuity between combination meter harness connector M44 terminal 28 (B/Y) and ambient sensor harness connector E38 terminal 2 (B/Y).

28 (B/Y) – 2 (B/Y) : Continuity should exist.

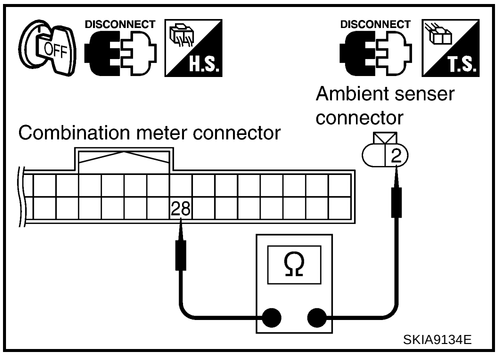

OK or NG

OK >> GO TO 3.
NG >> Repair harness or connector.

3. CHECK AMBIENT SENSOR

Check ambient sensor. Refer to DI-22, "AMBIENT SENSOR CHECK" .

OK or NG

OK >> Replace combination meter.
NG >> Replace ambient sensor.

4. CHECK AMBIENT SENSOR CIRCUIT BETWEEN AMBIENT SENSOR AND COMBINATION METER

1. Turn ignition switch OFF.
2. Disconnect combination meter connector.
3. Check continuity between combination meter harness connector M44 terminal 27 (R/B) and ambient sensor connector E38 terminal 1 (R/B).

27 (R/B) – 1 (R/B) : Continuity should exist.

4. Check continuity between combination meter harness connector M44 terminal 27 (R/B) and ground.

27 (R/B) – Ground : Continuity should not exist.

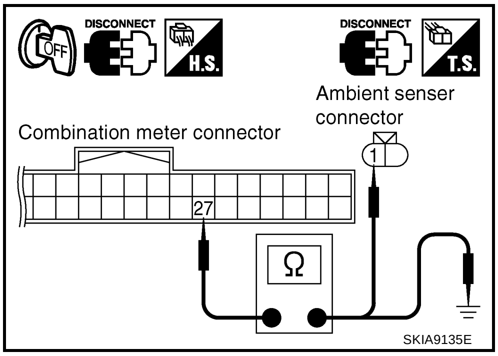

OK or NG

OK >> Replace combination meter.
NG >> Repair harness or connector.

Ambient Temperature Signal Inspection [With Auto A/C]

AKS00BAK

1. CHECK AUTO A/C RECOGNITION SIGNAL INPUT

1. Turn ignition switch OFF.
2. Disconnect combination meter connector.
3. Turn ignition switch ON.
4. Check voltage between combination meter harness connector M44 terminal 29 (Y) and ground.

29 (Y) – Ground : Approx. 5 V

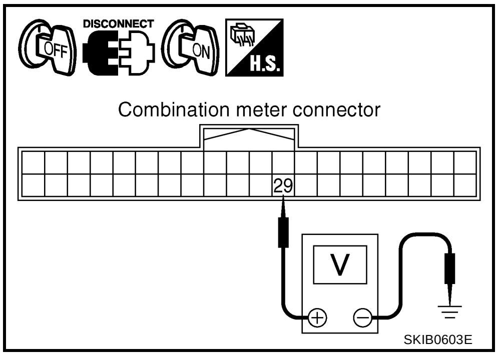

OK or NG

OK >> GO TO 3.
NG >> GO TO 2.

2. CHECK AUTO A/C RECOGNITION SIGNAL CIRCUIT

1. Turn ignition switch OFF.
2. Disconnect A/C auto amp. connector.
3. Check continuity between combination meter harness connector M44 terminal 29 (Y) and A/C auto amp. harness connector M53 terminal 28(Y).

29 (Y) – 28 (Y) : Continuity should exist.

4. Check continuity between connector M44 terminal 29 (Y) and ground.

29 (Y) – Ground : Continuity should not exist.

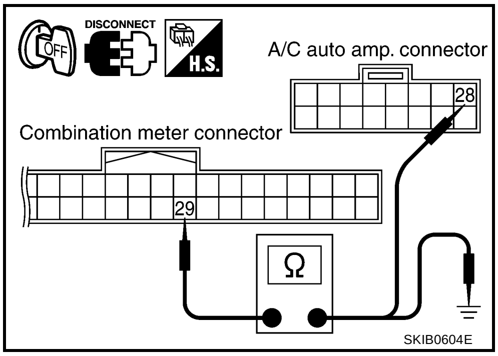

OK or NG

OK >> Replace A/C auto amp.
NG >> Repair harness or connector.

3. CHECK AMBIENT SENSOR CIRCUIT BETWEEN AMBIENT SENSOR AND COMBINATION METER

1. Turn ignition switch OFF.
2. Disconnect ambient sensor connector.
3. Check continuity between combination meter harness connector M44 terminal 27 (R/B) and ambient sensor harness connector E38 terminal 1 (R/B).

27 (R/B) – 1 (R/B) : Continuity should exist.

4. Check continuity between combination meter harness connector M44 terminal 27 (R/B) and ground.

27 (R/B) – Ground : Continuity should not exist.

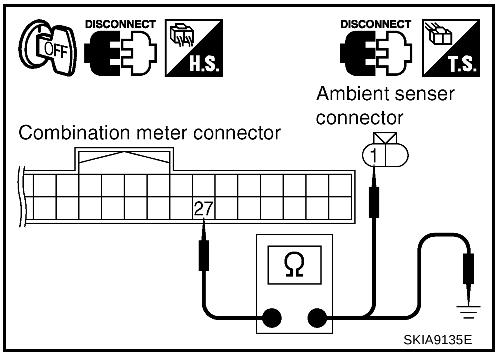

OK or NG

OK >> GO TO 4.
NG >> Repair harness or connector.

4. CHECK A/C AUTO AMP. CIRCUIT

Check A/C auto amp. circuit. Refer to ATC-88, "Ambient Sensor Circuit" in ATC section.

OK or NG

OK >> Replace combination meter.
NG >> Check applicable parts, repair or replace corresponding parts.

A B C D E F G H I J DI L M

Electrical Components Inspection

AKS00BAL

FUEL LEVEL SENSOR UNIT CHECK

For removal, refer to FL-4, "FUEL LEVEL SENSOR UNIT, FUEL FILTER AND FUEL PUMP ASSEMBLY" .

Fuel Level Sensor Unit

Check the resistance between terminals 1 and 4.

Terminals		Float position [mm (in)]			Resistance value [Ω]
4	1	*1	Full	30 (1.18)	Approx. 5
		*2	Empty	159 (6.25)	Approx. 80

*1 and *2: When float rod is in contact with stopper.

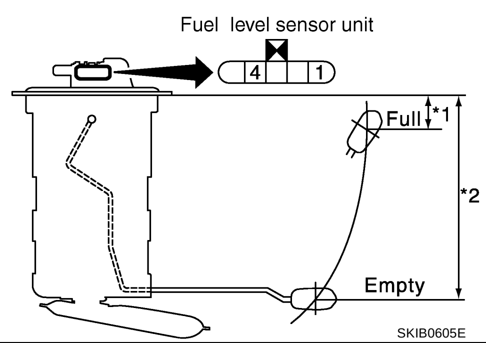

SKIB0605E

Sub Fuel Level Sensor Unit

Check the resistance between terminals 1 and 3.

Terminals		Float position [mm (in)]			Resistance value [Ω]
1	3	*1	Full	30 (1.18)	Approx. 1
		*2	Empty	191 (7.52)	Approx. 40.5

*1 and *2: When float rod is in contact with stopper.

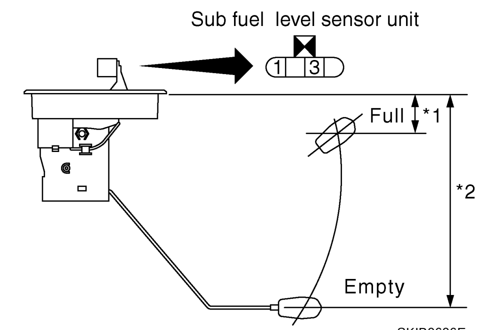

SKIB0606E

AMBIENT SENSOR CHECK

After disconnecting ambient sensor connector, measure resistance between terminals 2 and 1 at sensor side, using the table below.

Temperature [°C (°F)]	Resistance [kΩ]
-15 (5)	12.73
-10 (14)	9.92
-5 (23)	7.80
0 (32)	6.19
5 (41)	4.95
10 (50)	3.99
15 (59)	3.24
20 (68)	2.65
25 (77)	2.19
30 (86)	1.81
35 (95)	1.51
40 (104)	1.27
45 (113)	1.07

If NG, replace ambient sensor.

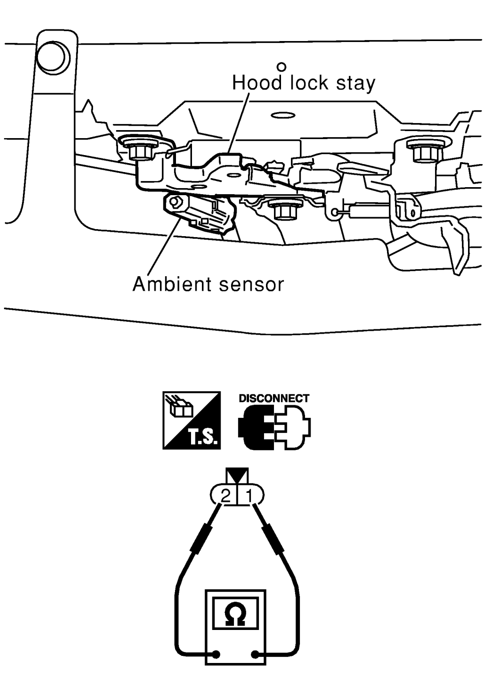

RJIA0684E

Removal and Installation for Combination Meter

AKS00BAM

REMOVAL

1. Remove cluster lid A. Refer to IP-10, "INSTRUMENT PANEL ASSEMBLY" .
2. Remove the screws (4), and pull out combination meter.
3. Disconnect connectors and remove combination meter.

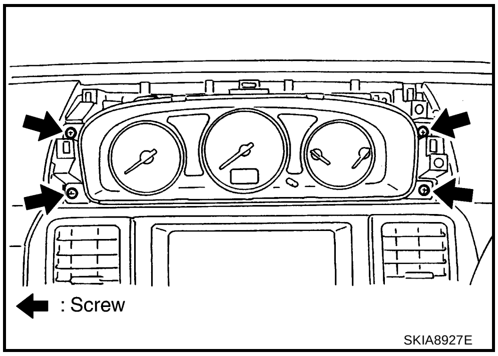

INSTALLATION

Installation is the reverse order of removal.

Disassembly and Assembly for Combination Meter

AKS00BAN

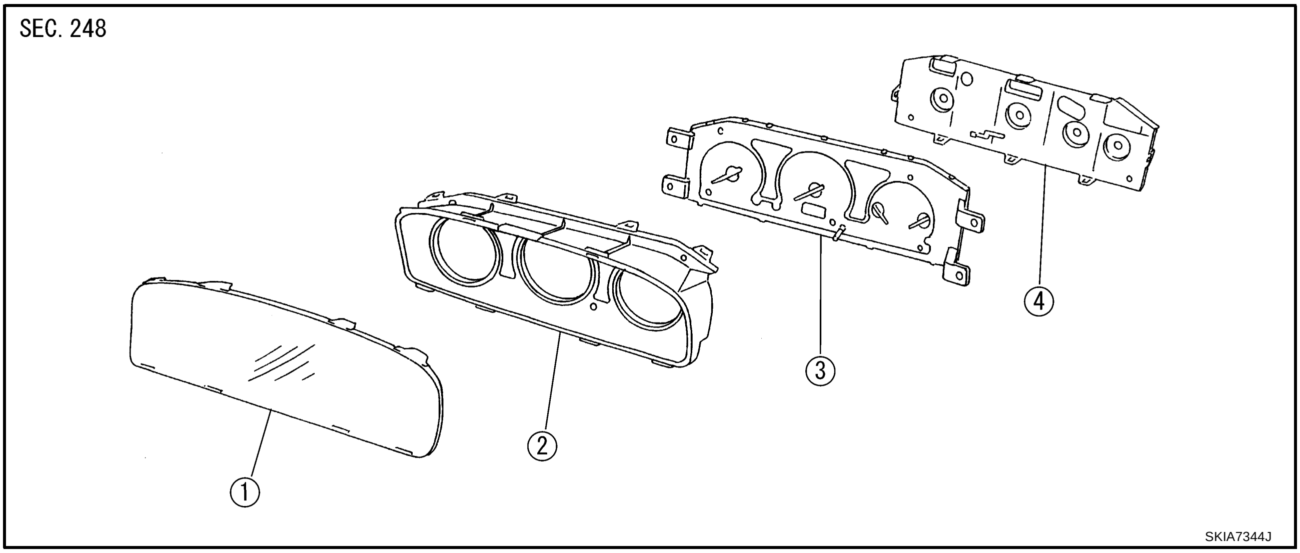

1. Front cover
2. Upper housing
3. Unified meter control unit assembly
4. Meter cover

DISASSEMBLY

1. Disengaged the tabs (8) to separate front cover.
2. Disengaged the tabs (8) to separate upper housing.
3. Disengaged the tabs (8) to separate meter cover.

ASSEMBLY

Assembly is the reverse order of disassembly.

A B C D E F G H I J DI L M

WARNING LAMPS

PFP:24814

Schematic

AKS00BAO

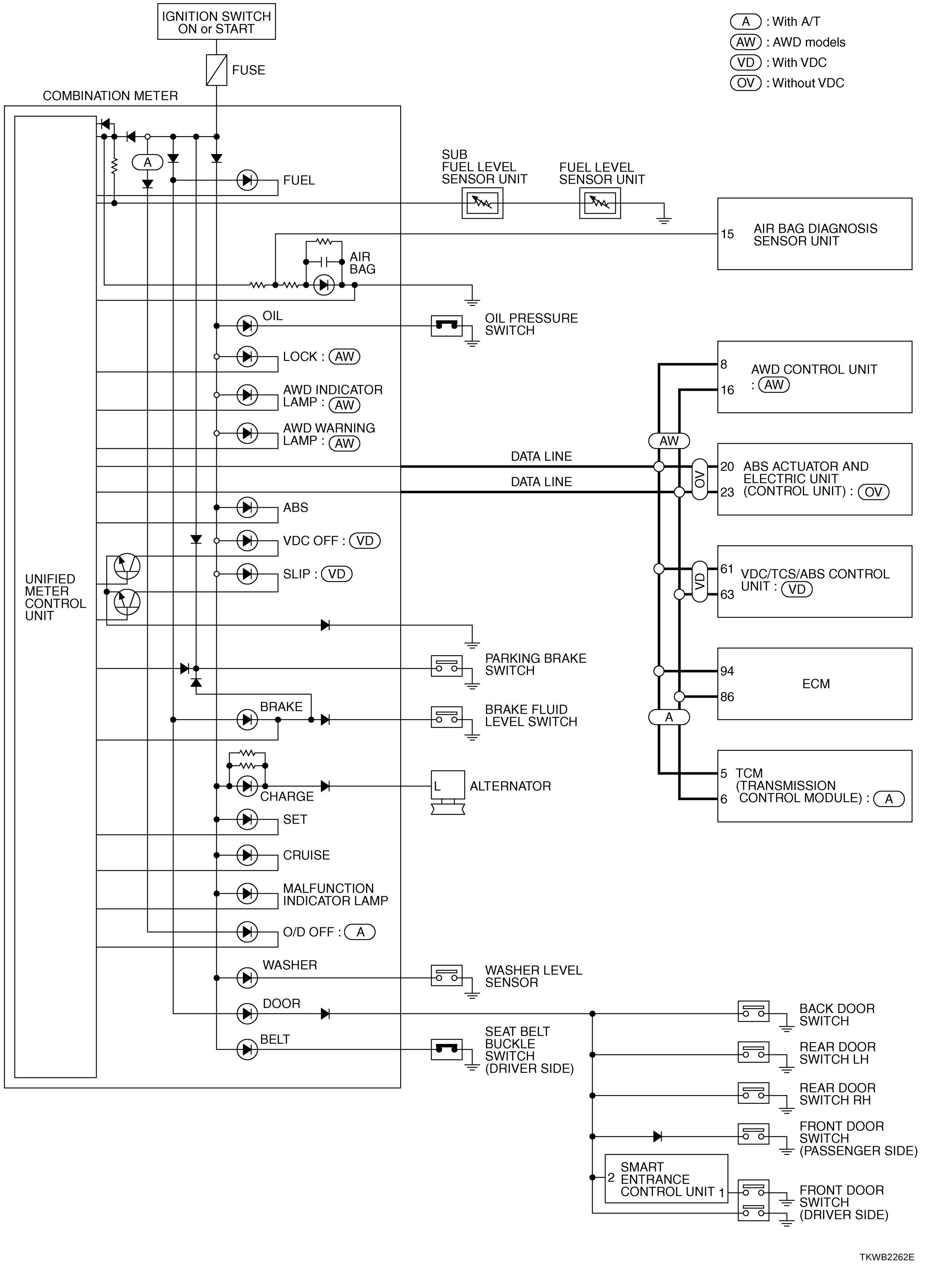

Wiring Diagram — WARN —
AWD MODELS

AKS00BAP

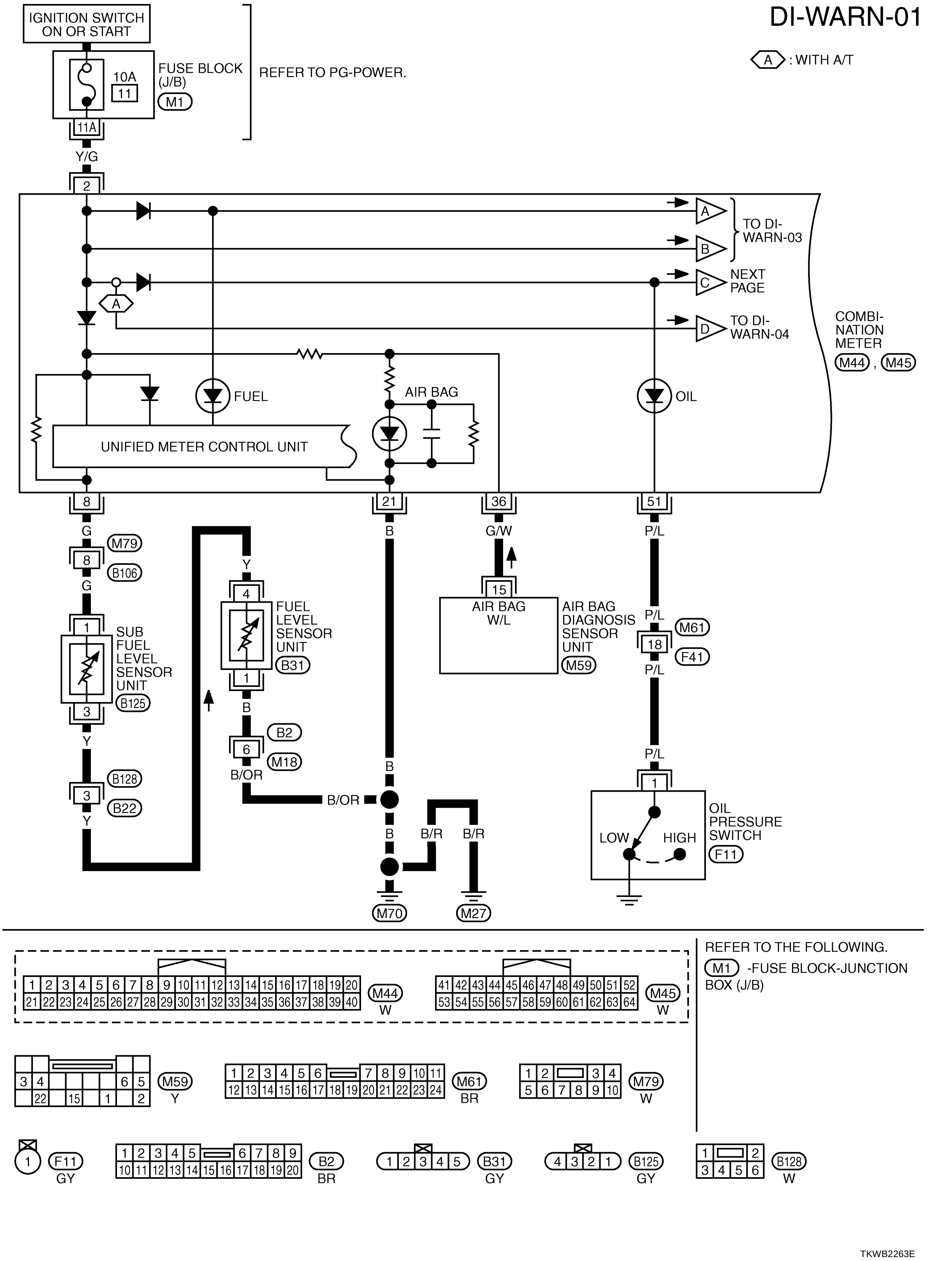

DI-WARN-02

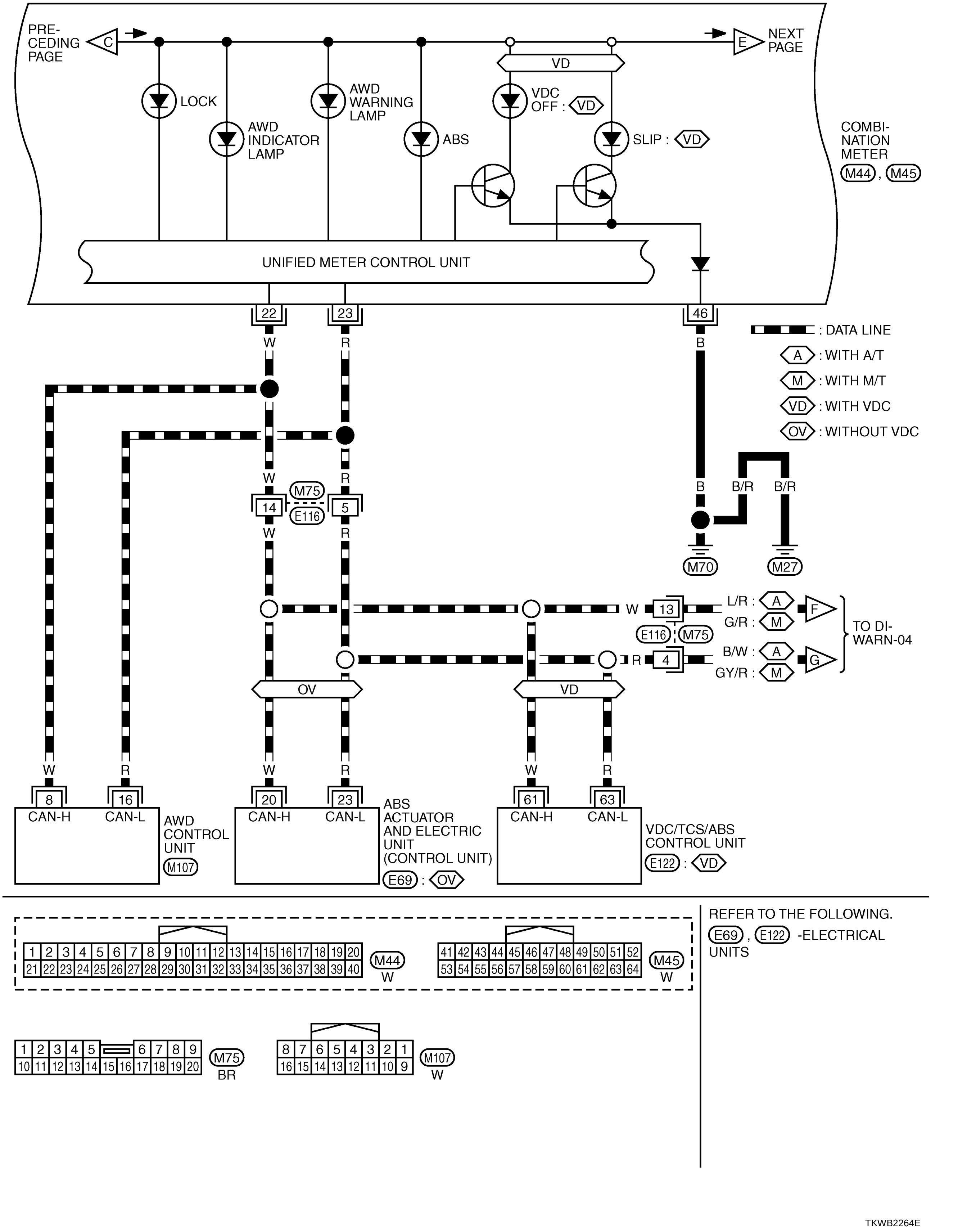
PRE-
CEDING
PAGE
C
NEXT
PAGE
E
VD
LOCK
AWD
INDICATOR
LAMP
AWD
WARNING
LAMP
ABS
VDC
OFF : VD
SLIP : VD
COMBI-
NATION
METER
M44 , M45
UNIFIED METER CONTROL UNIT
22
23
46
W
R
B
: DATA LINE
A : WITH A/T
M : WITH M/T
VD : WITH VDC
OV : WITHOUT VDC
M75
E116
14
5
B/R
M70
M27
13
4
L/R : A
G/R : M
B/W : A
GY/R : M
F
G
TO DI-
WARN-04
OV
8
16
CAN-H
CAN-L
AWD
CONTROL
UNIT
M107
20
ABS
ACTUATOR
AND ELECTRIC
UNIT
(CONTROL UNIT)
E69 : OV
61
63
VDC/TCS/ABS
CONTROL UNIT
E122 : VD
REFER TO THE FOLLOWING.
E69 , E122 -ELECTRICAL
UNITS
1 2 3 4 5 6 7 8 9 10 11 12 13 14 15 16 17 18 19 20
21 22 23 24 25 26 27 28 29 30 31 32 33 34 35 36 37 38 39 40
M44
41 42 43 44 45 46 47 48 49 50 51 52
53 54 55 56 57 58 59 60 61 62 63 64
M45
1 2 3 4 5 6 7 8 9
10 11 12 13 14 15 16 17 18 19 20
M75
BR
8 7 6 5 4 3 2 1
16 15 14 13 12 11 10 9
M107
TKWB2264E

DI-WARN-03

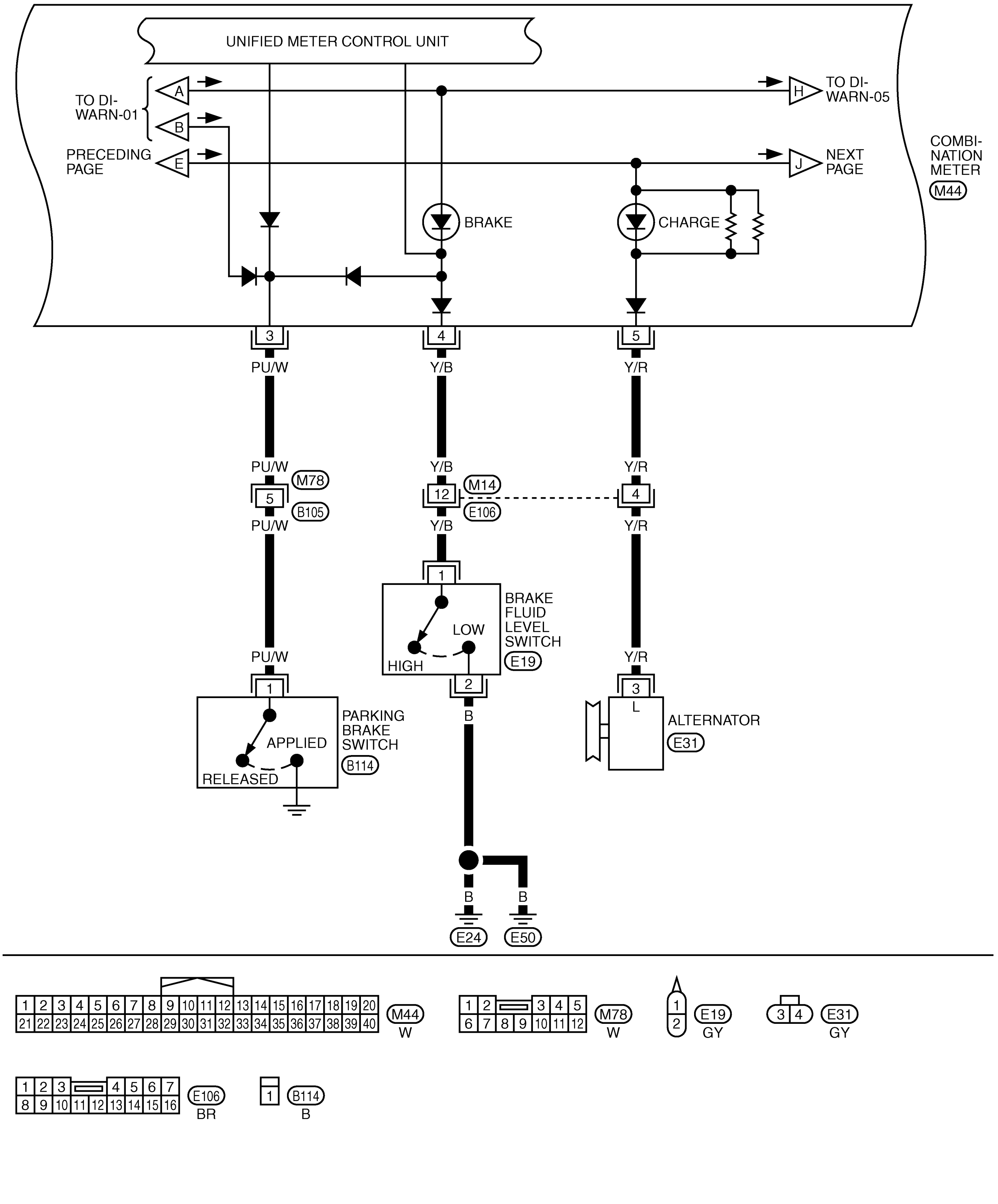
UNIFIED METER CONTROL UNIT
TO DI-WARN-01
A
B
PRECEDING PAGE
E
H
TO DI-WARN-05
J
NEXT PAGE
COMBI-NATION METER
M44
BRAKE
CHARGE
3
4
5
PU/W
Y/B
Y/R
M78
5
B105
M14
12
E106
4
1
BRAKE FLUID LEVEL SWITCH
E19
LOW
HIGH
2
B
PARKING BRAKE SWITCH
B114
APPLIED
RELEASED
3
L
ALTERNATOR
E31
E24
E50
M44
W
M78
W
E19
GY
E31
GY
E106
BR
B114
B
TKWB0178E

DI-WARN-04

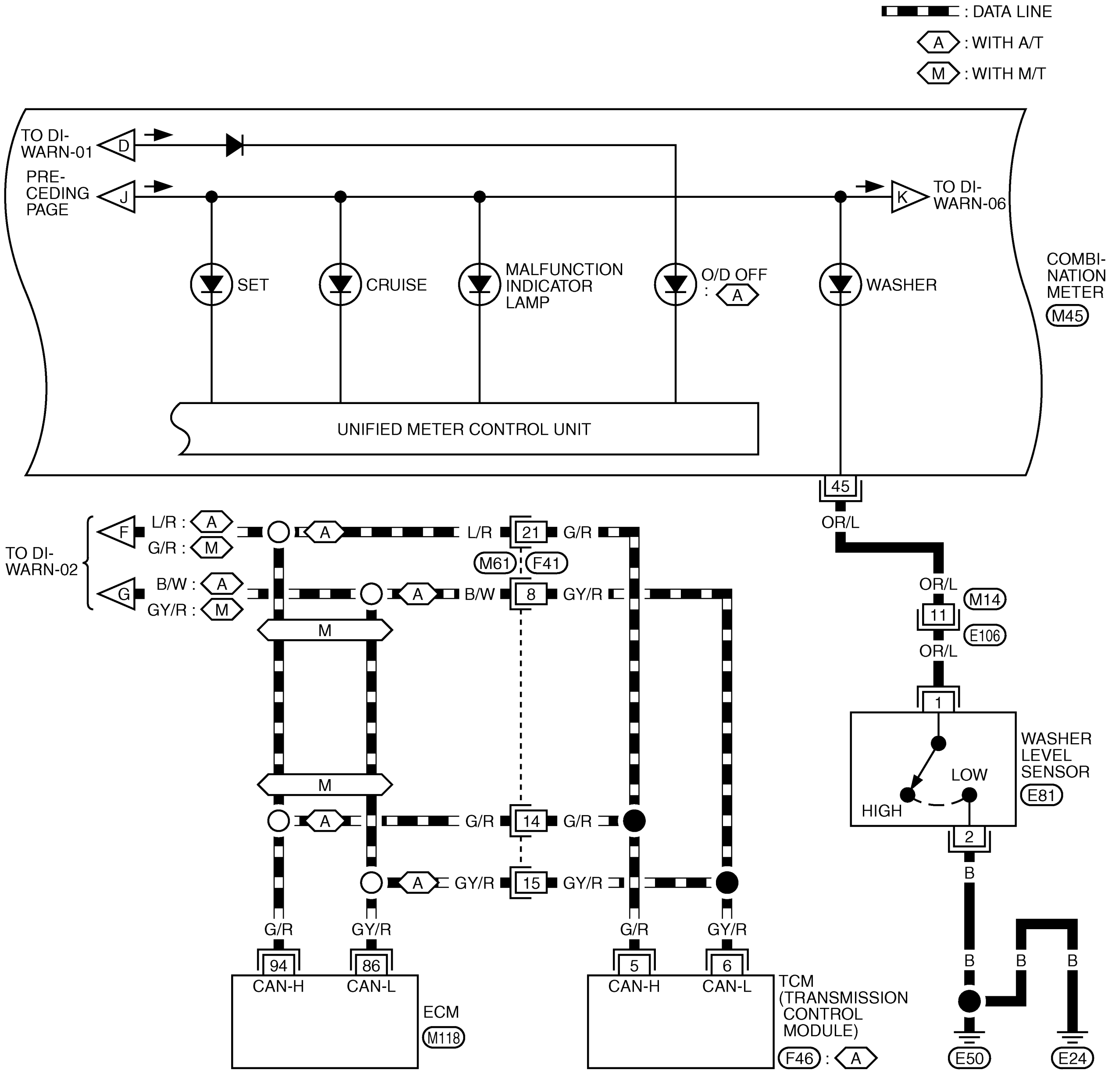

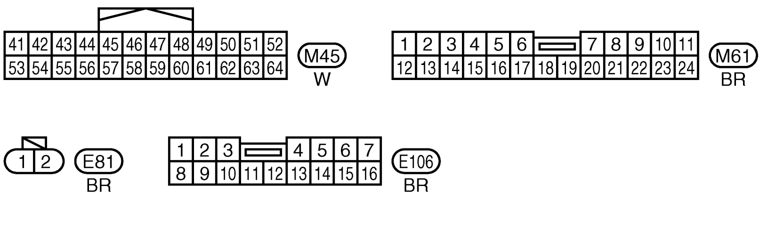

REFER TO THE FOLLOWING.
(M118), (F46) -ELECTRICAL UNITS

TKWB0179E

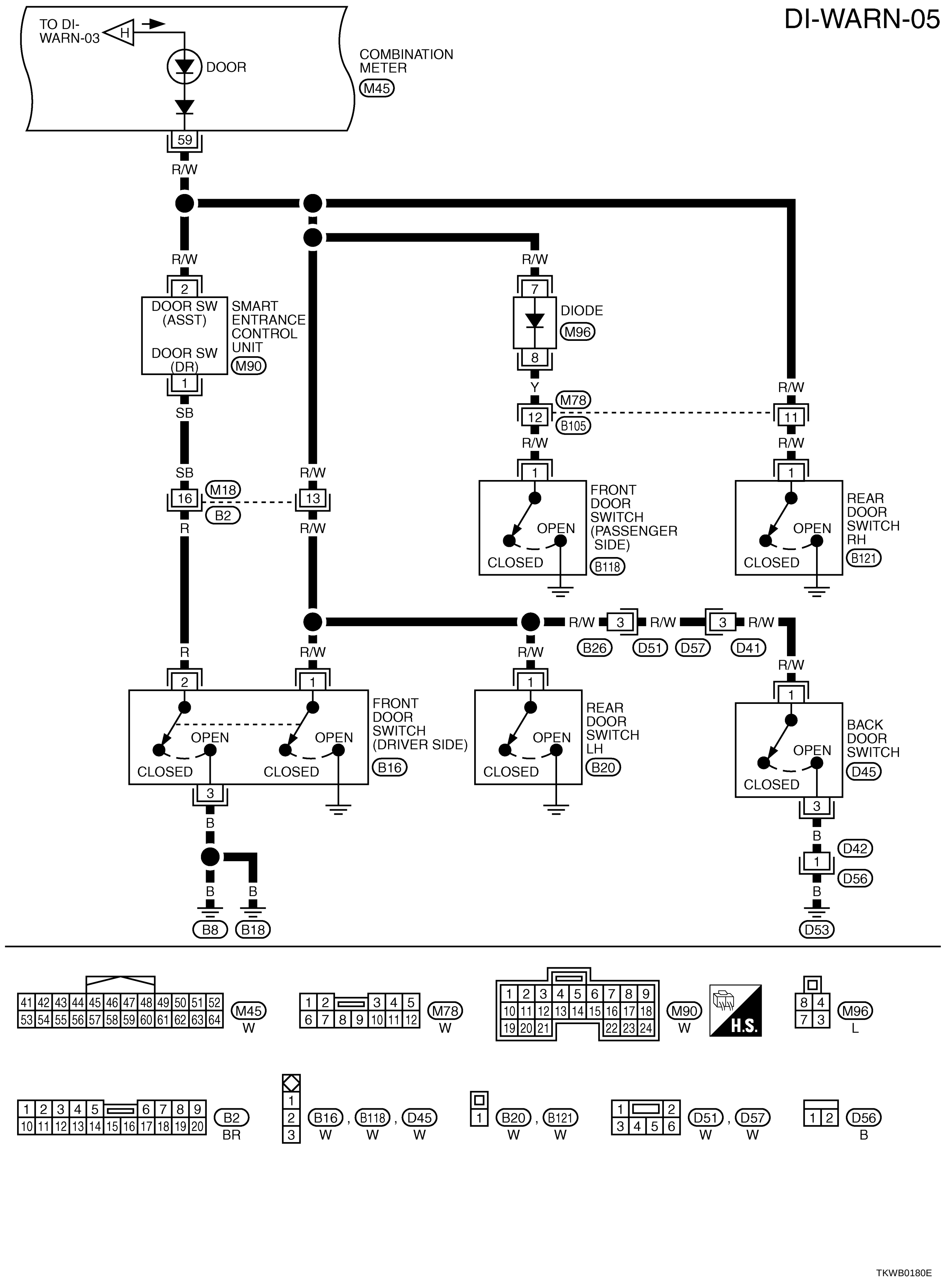

A B C D E F G H I J DI L M

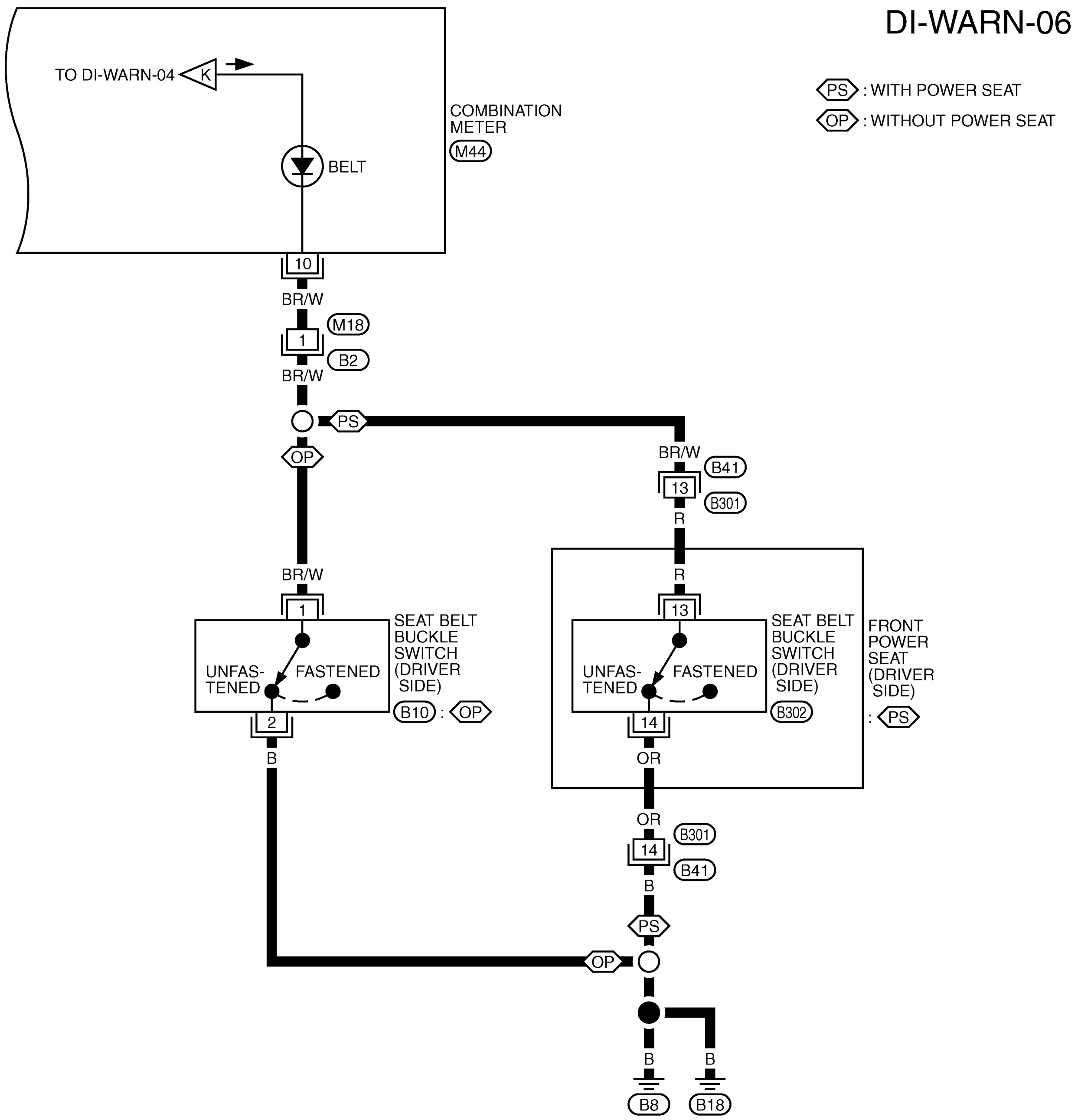

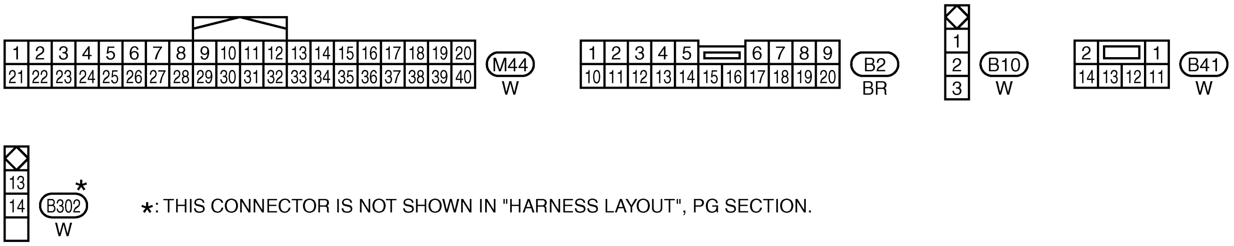

*: THIS CONNECTOR IS NOT SHOWN IN "HARNESS LAYOUT", PG SECTION.

TKWB0181E

2WD MODELS

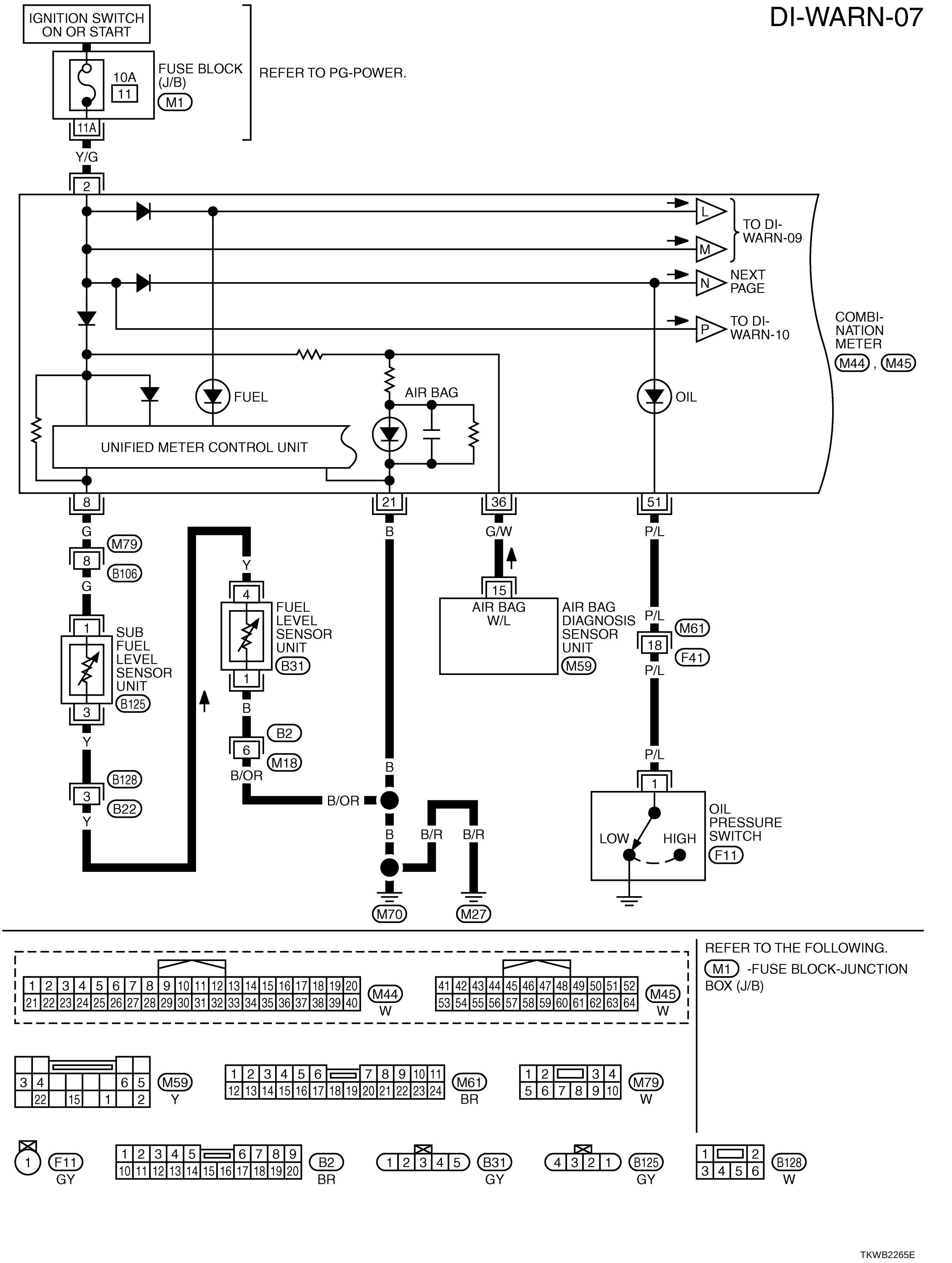
DI-WARN-07
IGNITION SWITCH ON OR START
10A
11
FUSE BLOCK (J/B)
M1
11A
REFER TO PG-POWER.
Y/G
2
TO DI-WARN-09
NEXT PAGE
TO DI-WARN-10
COMBINATION METER
M44, M45
FUEL
AIR BAG
OIL
UNIFIED METER CONTROL UNIT
8
21
36
51
G
M79
B106
SUB FUEL LEVEL SENSOR UNIT
B125
Y
B128
B22
FUEL LEVEL SENSOR UNIT
B31
B
B2
M18
B/OR
B/R
M70
M27
G/W
15
AIR BAG W/L
AIR BAG DIAGNOSIS SENSOR UNIT
M59
P/L
M61
18
F41
OIL PRESSURE SWITCH
LOW
HIGH
F11
REFER TO THE FOLLOWING.
M1 -FUSE BLOCK-JUNCTION BOX (J/B)
M44 W
M45 W
M59 Y
M61 BR
M79 W
F11 GY
B2 BR
B31 GY
B125 GY
B128 W
TKWB2265E

DI-WARN-08

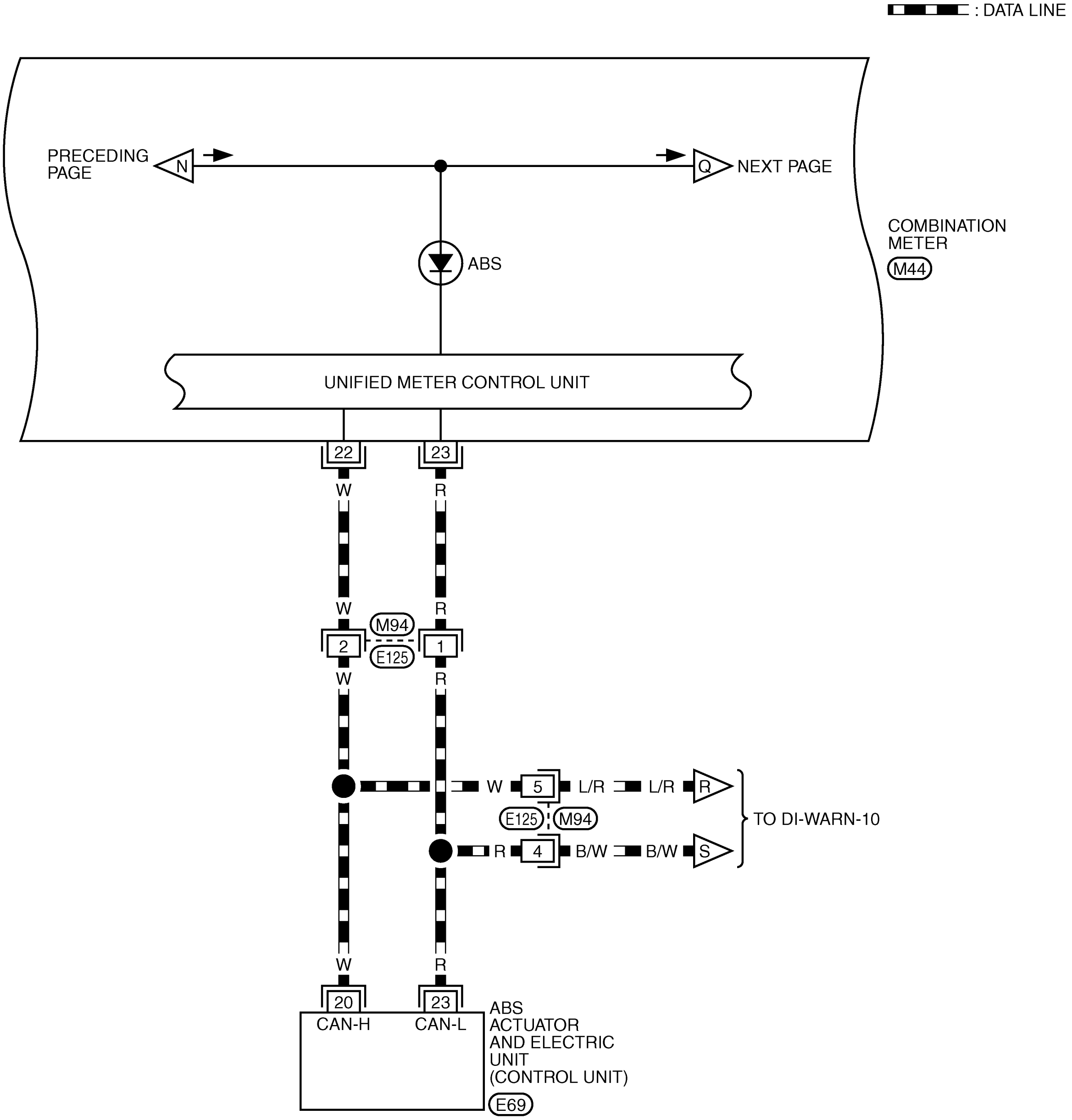

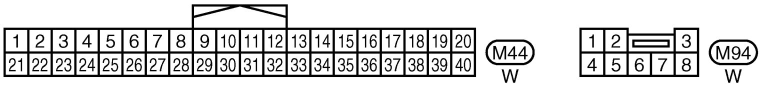

REFER TO THE FOLLOWING.

E69 -ELECTRICAL UNITS

TKWB0183E

DI-WARN-09

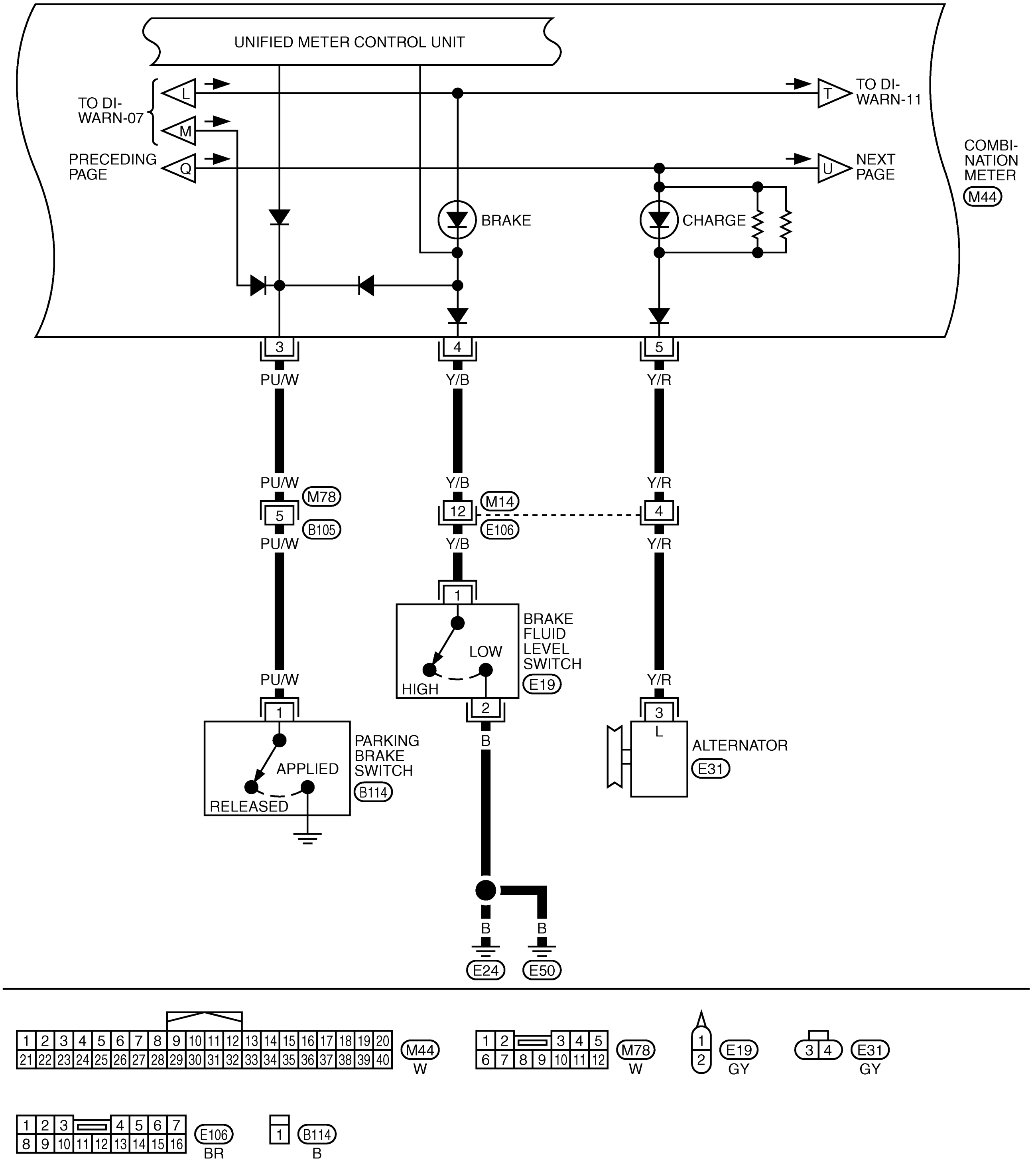

TKWB0184E

DI-WARN-10

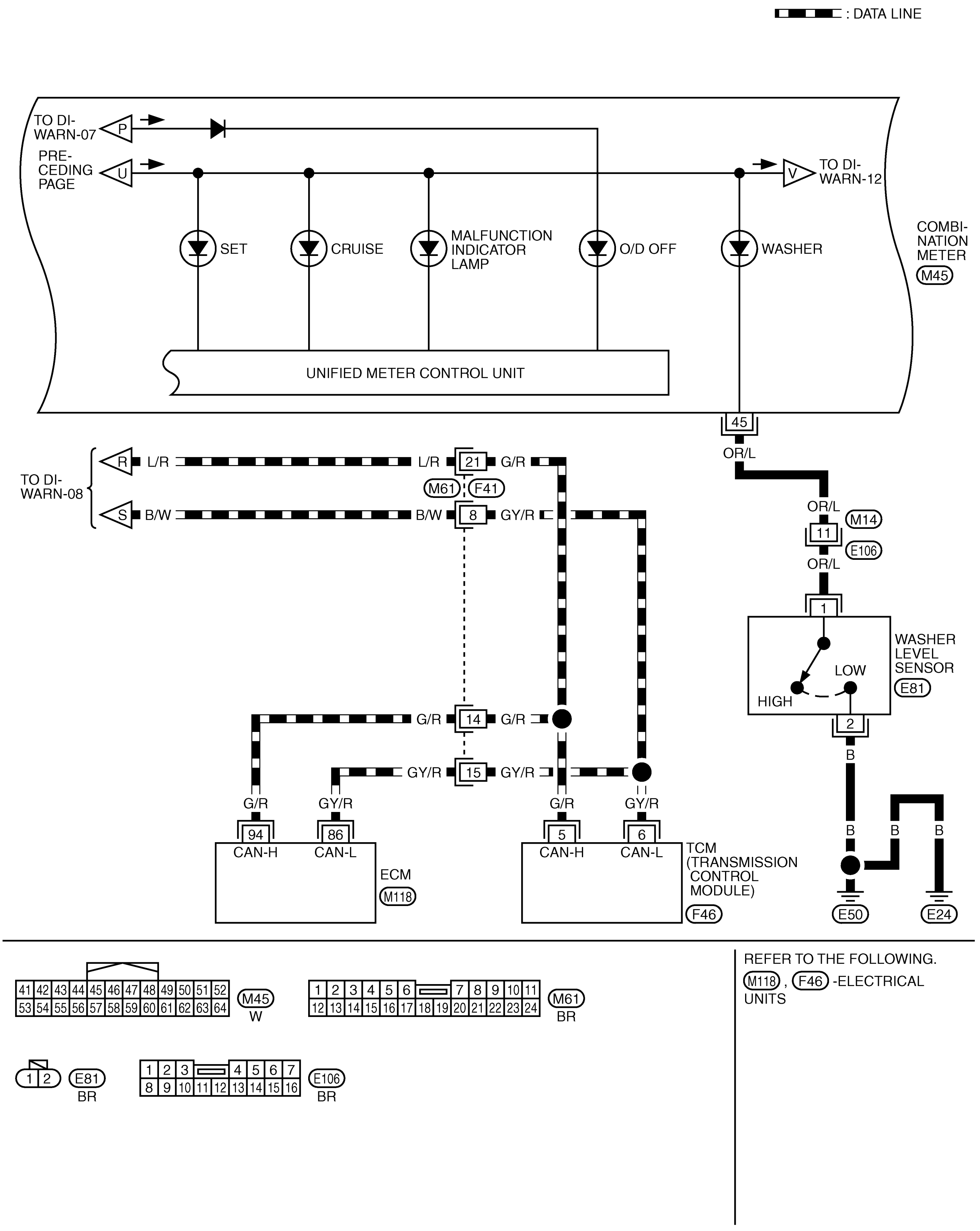

TKWB0185E

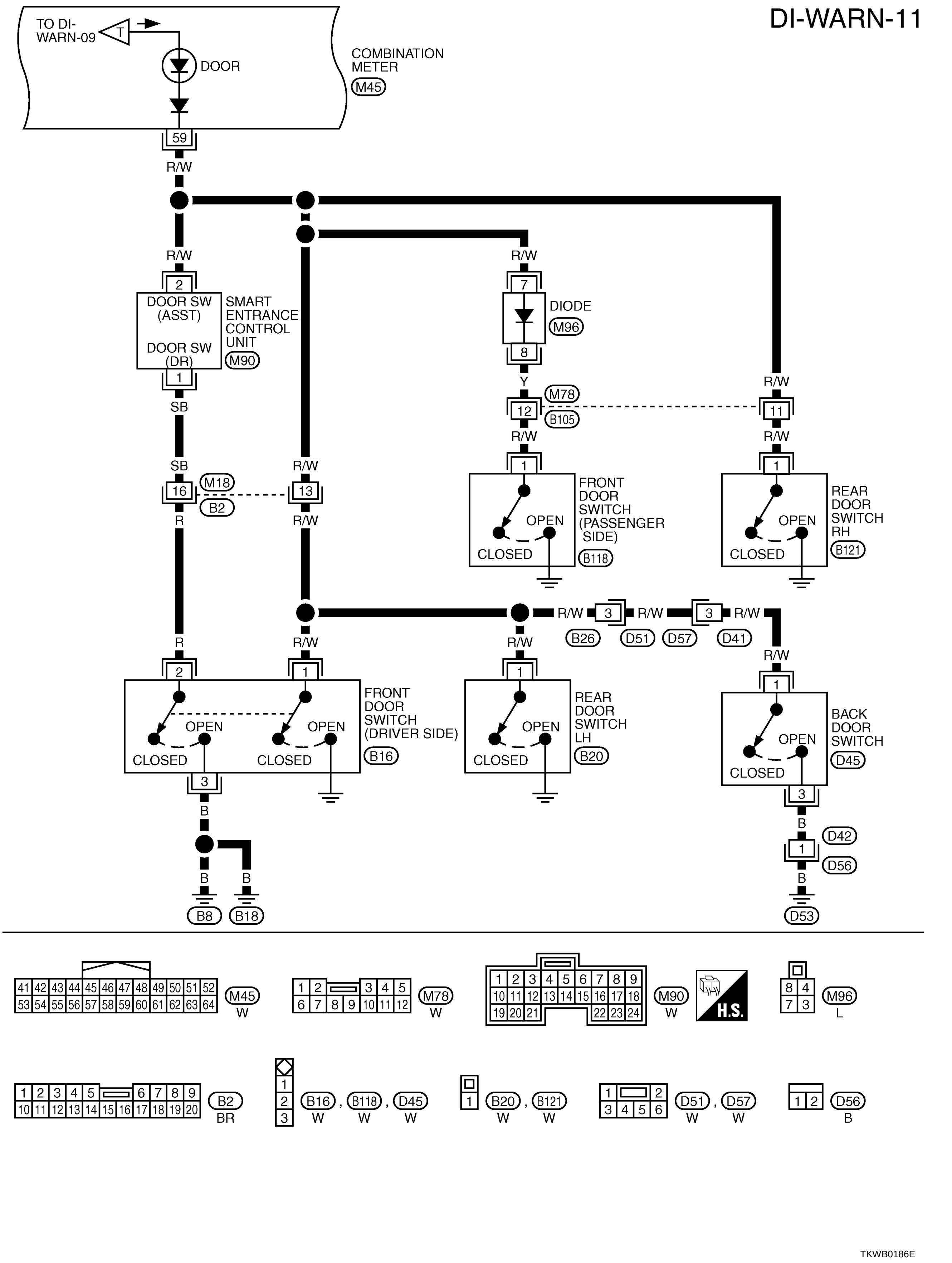
DI-WARN-11
TO DI-WARN-09
T
DOOR
COMBINATION METER
M45
59
R/W
R/W
2
DOOR SW (ASST)
DOOR SW (DR)
SMART ENTRANCE CONTROL UNIT
M90
1
SB
SB
16
M18
B2
R
R
R/W
13
R/W
R/W
7
DIODE
M96
8
Y
M78
12
B105
R/W
1
FRONT DOOR SWITCH (PASSENGER SIDE)
OPEN
CLOSED
B118
R/W
11
R/W
1
REAR DOOR SWITCH RH
OPEN
CLOSED
B121
R/W
3
R/W
3
R/W
B26
D51
D57
D41
2
1
FRONT DOOR SWITCH (DRIVER SIDE)
OPEN
CLOSED
OPEN
CLOSED
B16
3
B
B
B
B8
B18
R/W
1
REAR DOOR SWITCH LH
OPEN
CLOSED
B20
R/W
1
BACK DOOR SWITCH
OPEN
CLOSED
D45
3
B
D42
1
D56
B
D53
41 42 43 44 45 46 47 48 49 50 51 52
53 54 55 56 57 58 59 60 61 62 63 64
M45
W
1 2 3 4 5
6 7 8 9 10 11 12
M78
W
1 2 3 4 5 6 7 8 9
10 11 12 13 14 15 16 17 18
19 20 21 22 23 24
M90
W
H.S.
8 4
7 3
M96
L
1 2 3 4 5 6 7 8 9
10 11 12 13 14 15 16 17 18 19 20
B2
BR
1
2
3
B16 , B118 , D45
W W W
1
B20 , B121
W W
1 2
3 4 5 6
D51 , D57
W W
1 2
D56
B
TKWB0186E

DI-WARN-12

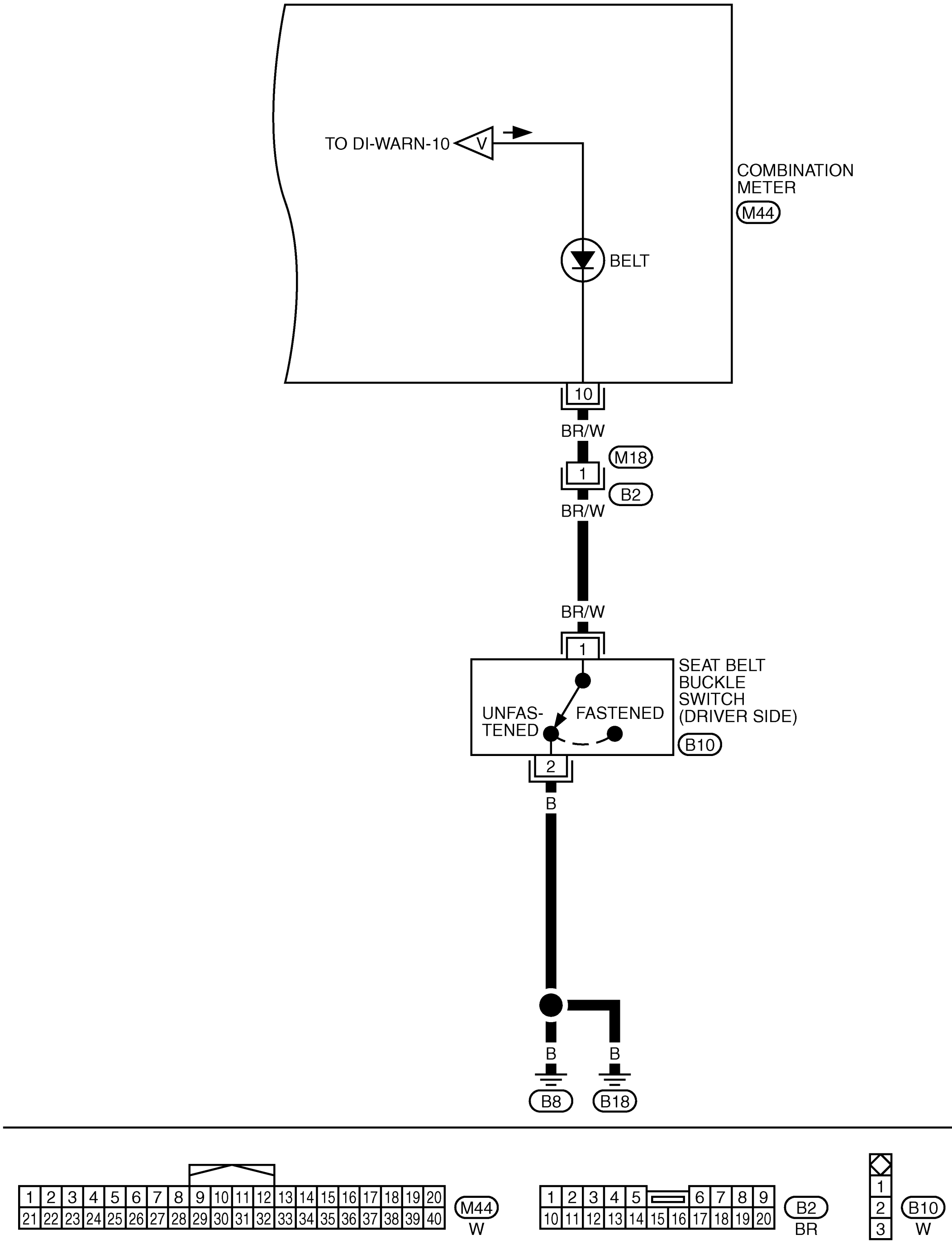
TO DI-WARN-10
V
COMBINATION
METER
M44
BELT
10
BR/W
M18
1
B2
BR/W
BR/W
1
SEAT BELT
BUCKLE
SWITCH
(DRIVER SIDE)
B10
UNFAS-
TENED
FASTENED
2
B
B
B
B8
B18
M44
W
B2
BR
B10
W
TKWB0187E

Electrical Components Inspection

AKS00BAT

OIL PRESSURE SWITCH CHECK

Condition	Oil pressure kPa (kg/cm^2 , psi)	Continuity
Engine running	More than 29 (0.3, 4)	No
Engine stopped	Less than 29 (0.3, 4)	Yes

Check the continuity between the terminals of oil pressure switch and body ground.

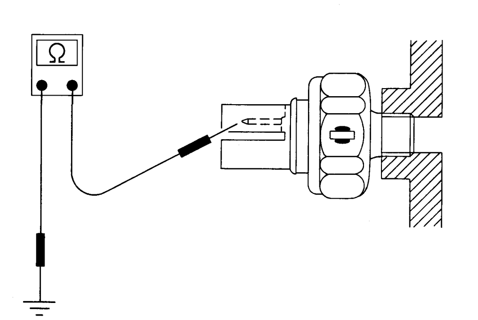

ELF0044D

DIODE CHECK

- Check continuity using an analog tester.
- Diode is functioning properly if test results are as shown in the figure at left.
- Check diodes at the combination meter harness connector instead of on the combination meter assembly.

  NOTE:
  Specification may vary depending on the type of tester. Before performing this inspection, be sure to refer to the instruction manual for the analog tester to be used.

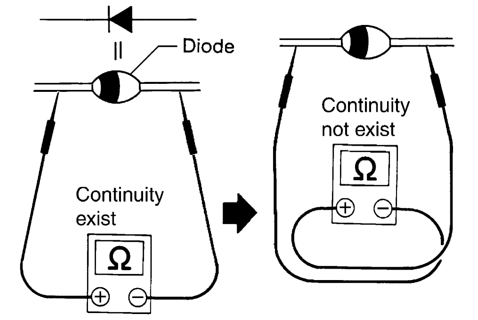

SKIB0607E

A/T INDICATOR

PFP:24814

Wiring Diagram — AT/IND — AWD MODELS

AKS00BAV

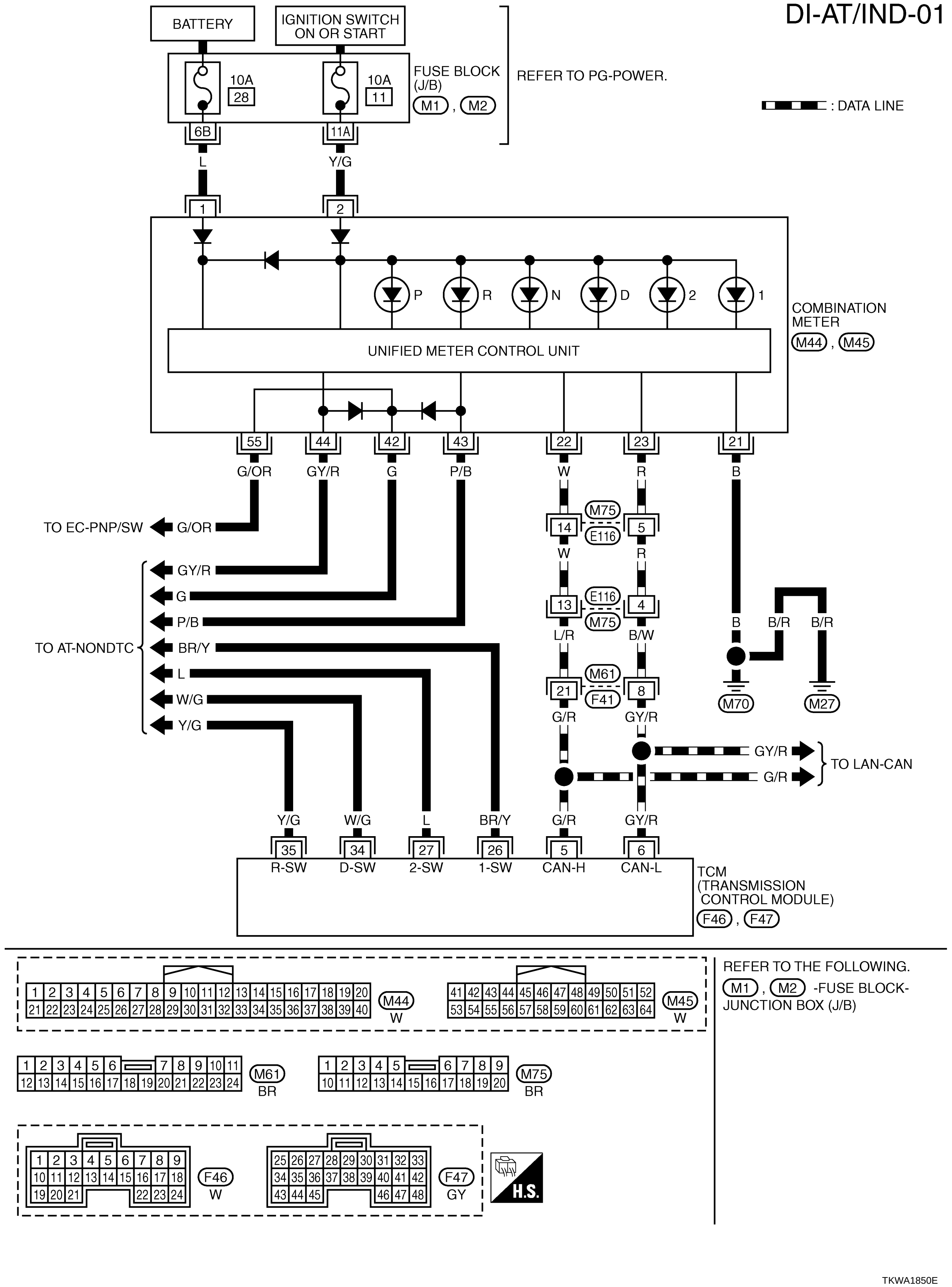

2WD MODELS

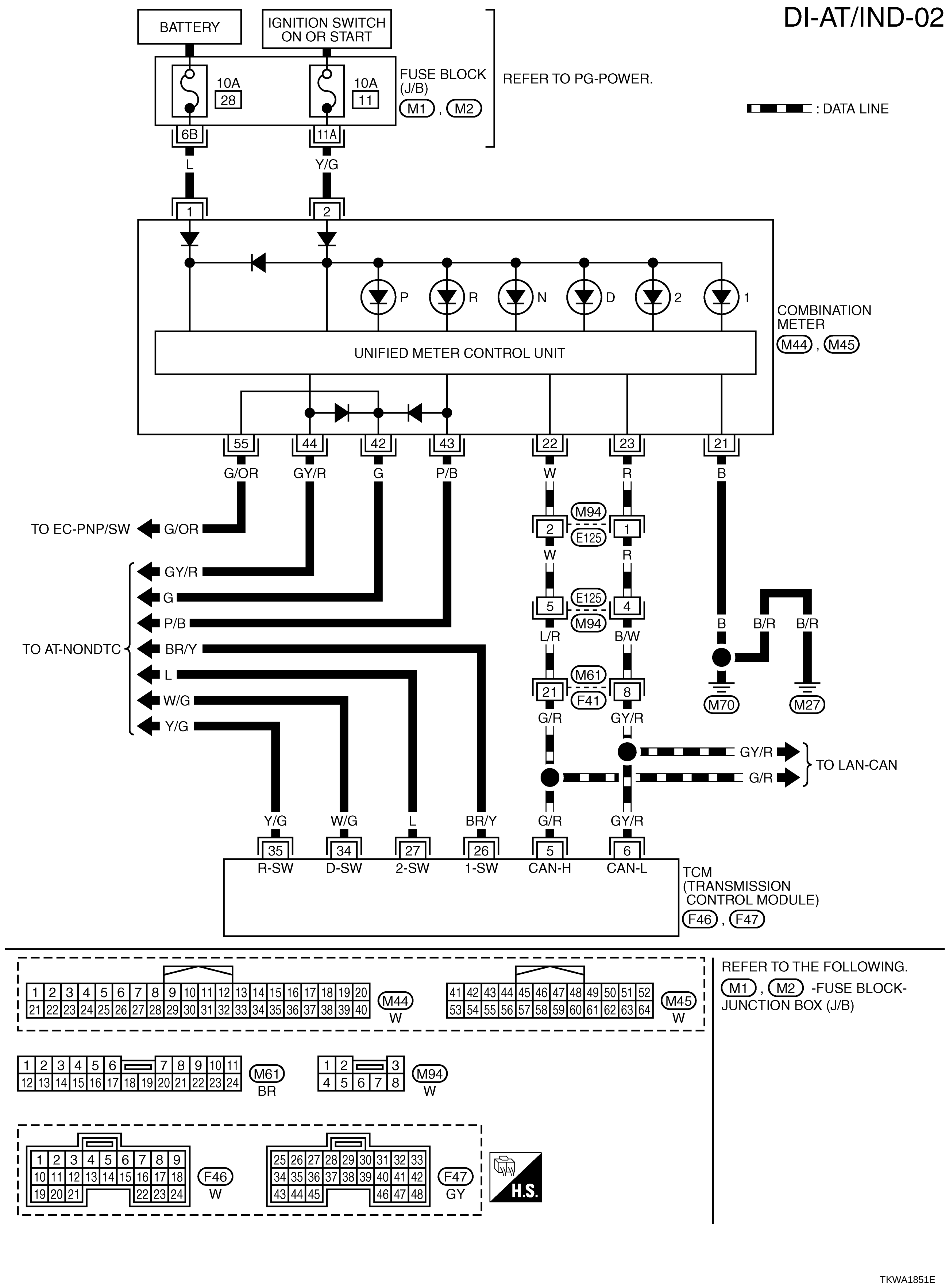
DI-AT/IND-02
BATTERY
IGNITION SWITCH ON OR START
10A 28
10A 11
FUSE BLOCK (J/B)
M1 , M2
REFER TO PG-POWER.
: DATA LINE
6B
11A
L
Y/G
1
2
P R N D 2 1
COMBINATION METER
M44 , M45
UNIFIED METER CONTROL UNIT
55 44 42 43 22 23 21
G/OR GY/R G P/B W R B
TO EC-PNP/SW
G/OR
GY/R
G
P/B
BR/Y
L
W/G
Y/G
TO AT-NONDTC
M94
E125
2 1
W R
5 4
L/R B/W
M61
F41
21 8
G/R GY/R
B B/R B/R
M70 M27
GY/R
G/R
TO LAN-CAN
Y/G W/G L BR/Y G/R GY/R
35 34 27 26 5 6
R-SW D-SW 2-SW 1-SW CAN-H CAN-L
TCM (TRANSMISSION CONTROL MODULE)
F46 , F47
M44 W
M45 W
REFER TO THE FOLLOWING.
M1 , M2 -FUSE BLOCK-JUNCTION BOX (J/B)
M61 BR
M94 W
F46 W
F47 GY
H.S.
TKWA1851E

A/T Indicator Does Not Illuminate

AKS00BAX

1. CHECK TCM (CONSULT-II)

Perform self-diagnosis of TCM. Refer to AT-79, "CONSULT-II Function (A/T)" .

Self-diagnosis results

No malfunction detected>>Replace combination meter.
Malfunction detected>>Check applicable parts, and repair or replace corresponding parts.

WARNING CHIME

PFP:28596

System Description

AKS00BB4

The warning chime is controlled by the smart entrance control unit.
When a signal, or combination of signals, is received by the smart entrance control unit, the warning chime will sound.
The warning chime is located in the smart entrance control unit.

POWER SUPPLY AND GROUND CIRCUIT

Power is supplied at all times

- through 10 A fuse [No. 26, located in the fuse block (J/B)]
- to smart entrance control unit terminal 49
- through 10 A fuse [No. 28, located in the fuse block (J/B)]
- to key switch terminal 1
- through 10 A fuse (No. 31, located in fuse and fusible link box)
- to combination switch terminal 11.

With ignition switch in ON or START position, power is supplied

- through 10 A fuse [No. 5, located in the fuse block (J/B)]
- to smart entrance control unit terminal 27.

Ground is supplied

- to smart entrance control unit terminals 43 and 64
- through grounds M27 and M70.

IGNITION KEY WARNING CHIME

With key is inserted in the ignition key cylinder (OFF or ACC position), and the driver door open, the warning chime will sound.
Power is supplied as a signal

- through key switch terminal 2
- to smart entrance control unit terminal 25

Ground is supplied as a signal

- from front door switch (driver side) terminal 2
- to smart entrance control unit terminal 1.

Front door switch (driver side) terminal 3 is grounded through grounds B8 and B18.

LIGHT WARNING CHIME

With ignition switch in OFF or ACC position, driver door open and lighting switch in 1st or 2nd position, warning chime will sound.
Power is supplied as a signal

- through lighting switch terminal 12
- to smart entrance control unit terminal 58.

Ground is supplied as a signal

- from front door switch (driver side) terminal 2
- to smart entrance control unit terminal 1.

Front door switch (driver side) terminal 3 is grounded through grounds B8 and B18.

SEAT BELT WARNING CHIME

With ignition switch turned ON and seat belt unfastened [seat belt buckle switch (driver side) ON], warning chime will sound for approximately 6 seconds.

Without Power Seat

Ground is supplied as a signal

- from seat belt buckle switch (driver side) terminal 1
- to smart entrance control unit terminal 28.

Seat belt buckle switch (driver side) terminal 2 is grounded through grounds B8 and B18.

With Power Seat

Ground is supplied as a signal

- from seat belt buckle switch (driver side) terminal 13
- to smart entrance control unit terminal 28.

Seat belt buckle switch (driver side) terminal 14 is grounded through grounds B8 and B18.

Component Parts and Harness Connector Location

AKS00BLS

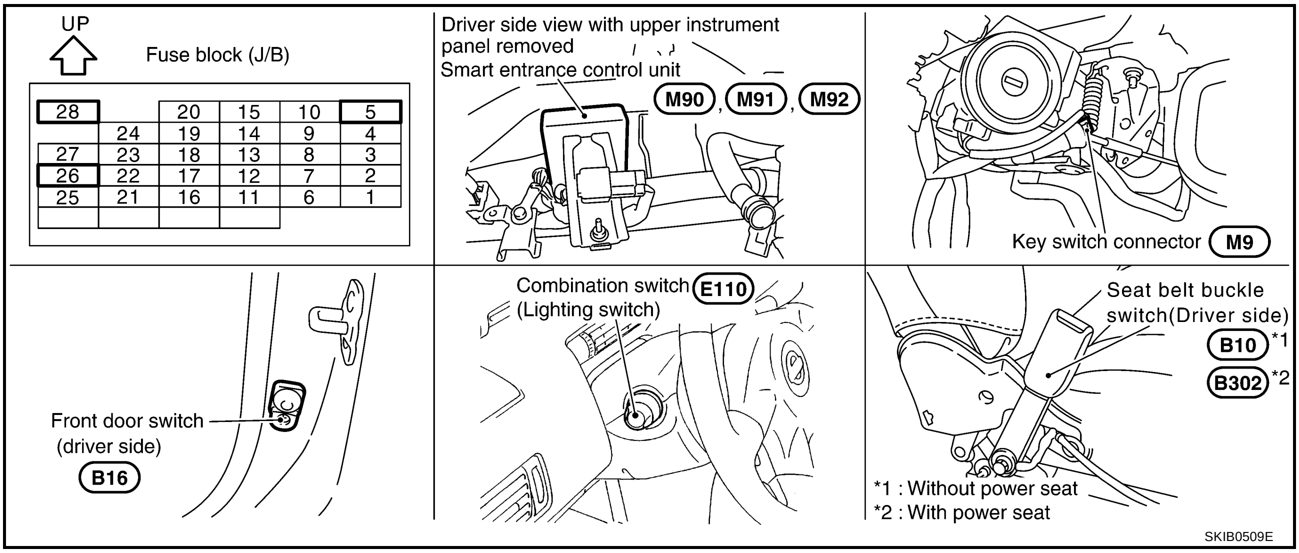

Schematic

AKS00C35

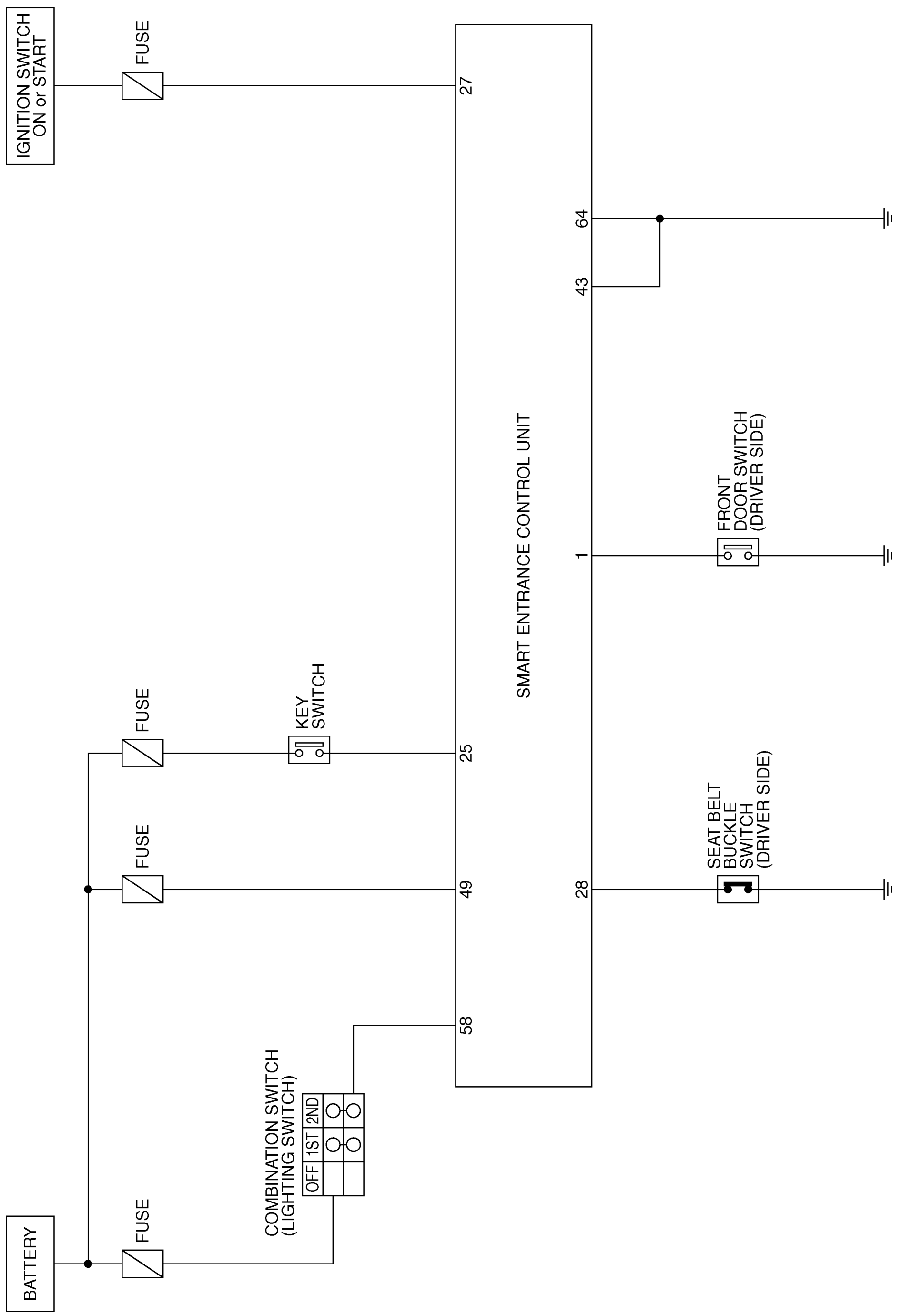

TKWB0269E

Wiring Diagram — CHIME —

AKS00BB5

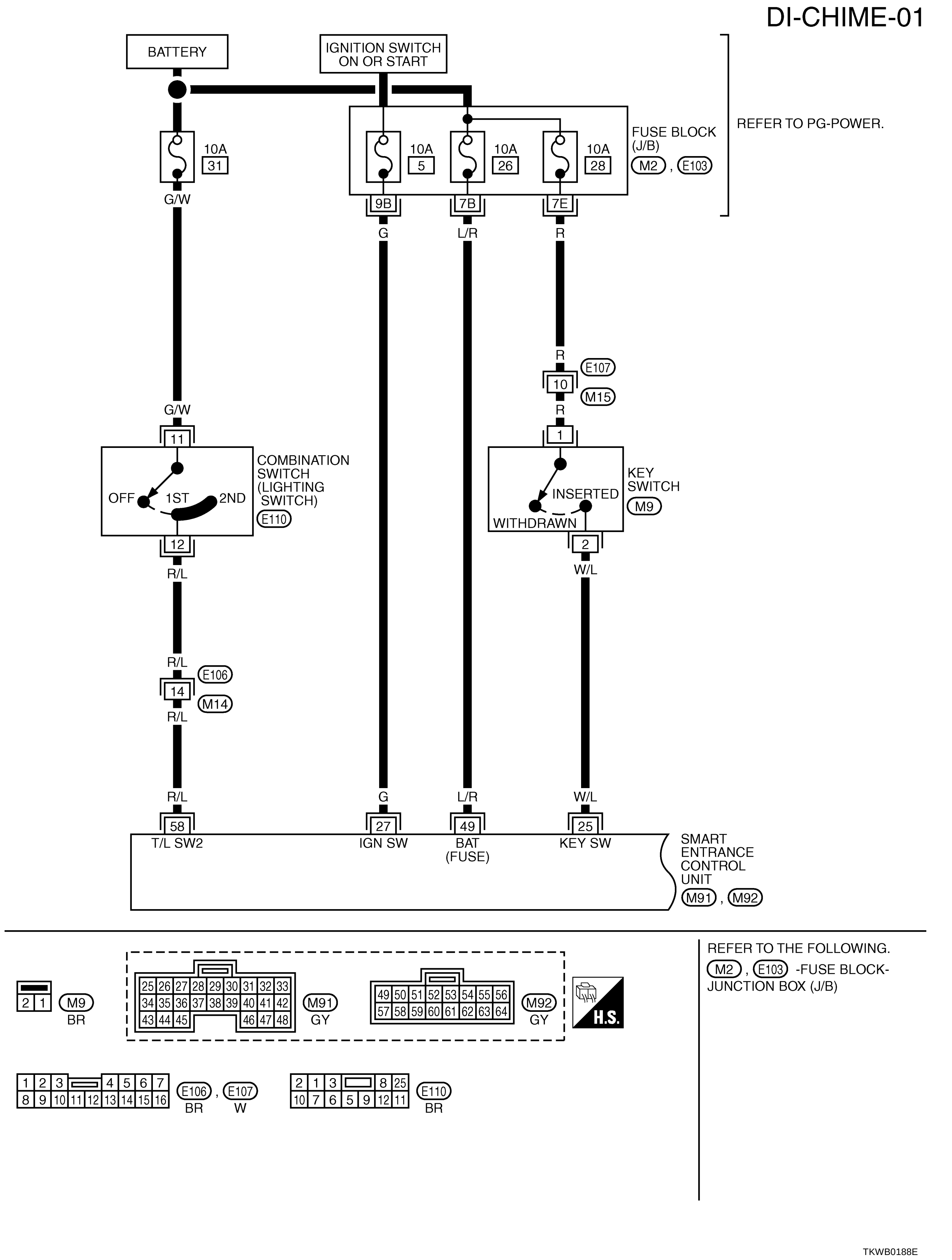

DI-CHIME-02

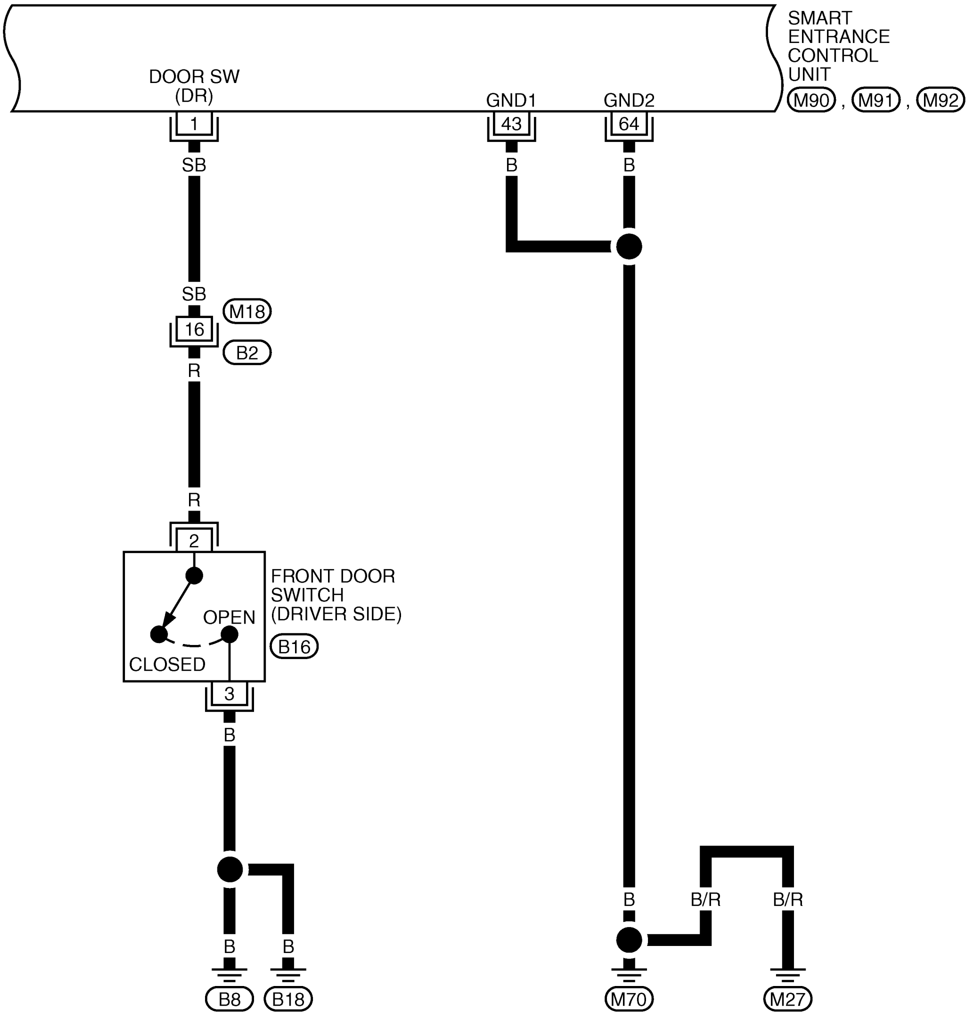

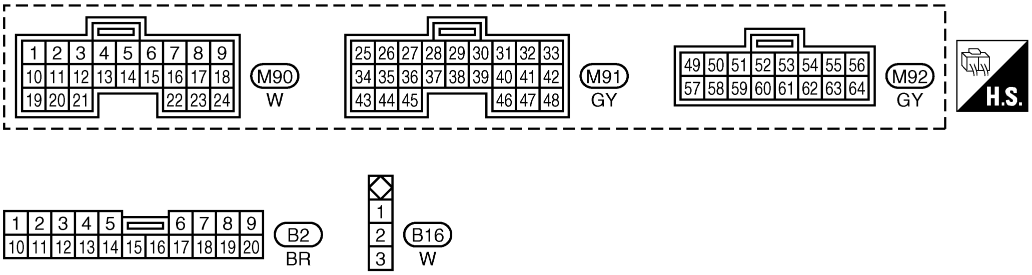

TKWB0189E

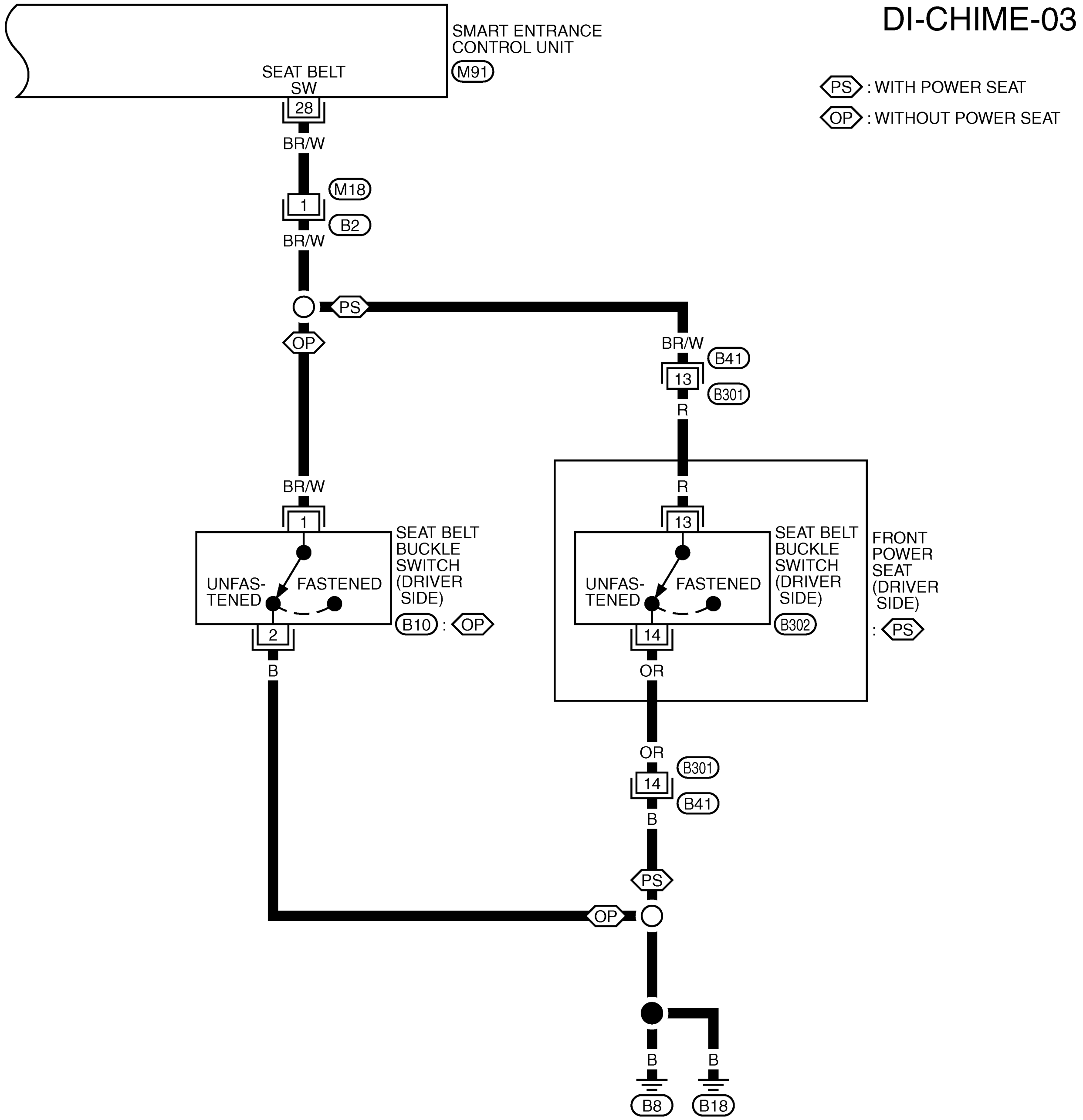

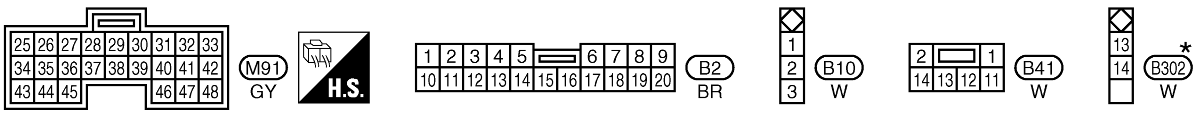

*: THIS CONNECTOR IS NOT SHOWN IN "HARNESS LAYOUT", PG SECTION.

TKWB0270E

Terminals and Reference Value for Smart Entrance Control Unit

AKS00BQR

Terminal No.	Wire color	Item	Condition			Reference values (Approx.)
			Ignition switch	Operation or condition		
1	SB	Front door switch (Driver side)	OFF	Front door (driver side)	Closed	12 V
					Open	0 V
25	W/L	Key switch (Insert)	OFF	Key inserted		12 V
				Key removed from ignition key cylinder		0 V
27	G	Ignition power supply	ON	—		Battery voltage
28	BR/W	Seat belt buckle switch (Driver side)	ON	Seat belt buckle	Unfastened	0 V
					Fastened	12 V
43	B	Ground	ON	—		0 V
49	L/R	Battery power supply	OFF	—		Battery voltage
58	R/L	Lighting switch	OFF	Lighting switch is 1ST or 2ND positions		12 V
				Lighting switch is OFF position		0 V
64	B	Ground	ON	—		0 V

Trouble Diagnosis

AKS00BQ8

HOW TO PERFORM WITH TROUBLE DIAGNOSIS

1. Confirm the symptom or customer complaint.
2. Understand the outline of system. Refer to DI-41, "System Description" .
3. According to symptom chart, make sure of the symptom cause and repair or replace applicable part. Refer to DI-47, "SYMPTOM CHART" .
4. Does warning chime system operate normally? If so, GO TO 5. If not, GO TO 3.
5. INSPECTION END

SYMPTOM CHART

Symptom	Diagnoses/Service procedure	Reference page
All warning chimes do not activate.	Power supply and ground circuit Inspection	DI-47
	If above systems are OK, replace smart entrance control unit	—
Light warning chime and key warning chime does not activate (Seat belt warning chime does activate)	Front door switch (driver side) Inspection	DI-48
	If above systems are OK, replace smart entrance control unit	—
Light warning chime does not activate.	Lighting switch input signal Inspection	DI-50
	If above systems are OK, replace smart entrance control unit	—
Key warning chime does not activate.	Key switch insert signal Inspection	DI-50
	If above systems are OK, replace smart entrance control unit	—
Seat belt warning chime does not activate	Seat belt buckle switch input signal Inspection [without power seat]	DI-51
	Seat belt buckle switch input signal Inspection [with power seat]	DI-53
	If above systems are OK, replace smart entrance control unit	—

Power Supply and Ground Circuit Inspection

AKS00BB8

1. CHECK FUSE

Check for blown smart entrance control unit fuses. Refer to PG-51, "FUSE BLOCK - JUNCTION BOX (J/B)" .

Unit	Power source	Fuse No.
Smart entrance control unit	Battery	26
	Ignition switch (ON)	5

OK or NG

OK >> GO TO 2.
NG >> If fuse is blown, be sure to eliminate cause of malfunction before installing new fuse.

2. CHECK POWER SUPPLY CIRCUIT

Check voltage between smart entrance control unit and ground.

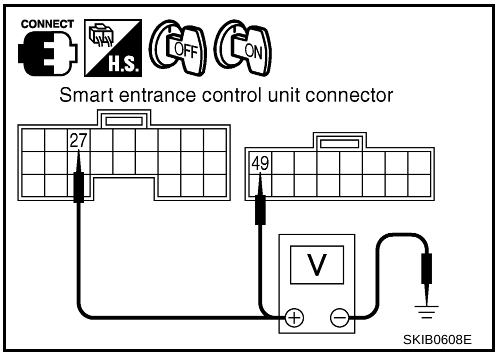

Terminals			Ignition switch position	
(+)		(–)	OFF	ON
Connector	Terminal (Wire color)			
M92	49 (L/R)	Ground	Battery voltage	Battery voltage
M91	27 (G)	Ground	0 V	Battery voltage

OK or NG

OK >> GO TO 3.
NG >> Check harness between fuse and smart entrance control unit.

3. CHECK GROUND CIRCUIT

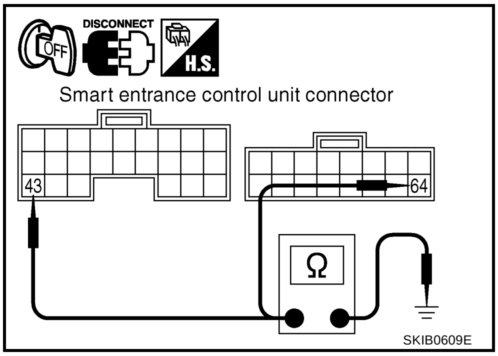

1. Turn ignition switch OFF.
2. Disconnect smart entrance control unit connector.
3. Check continuity between smart entrance control unit harness connector M91 terminal 43 (B) and ground.

43 (B) – Ground : Continuity should exist.

4. Check continuity between smart entrance control unit harness connector M92 terminal 64 (B) and ground.

64 (B) – Ground : Continuity should exist.

OK or NG

OK >> Power supply and ground circuit are OK.
NG >> Repair ground harness.

Front Door Switch (Driver Side) Inspection

AKS00BB9

1. CHECK DOOR SWITCH INPUT SIGNAL

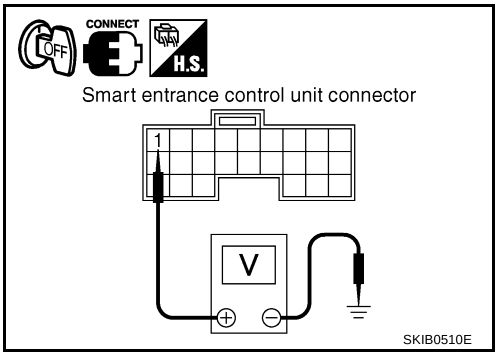

1. Turn ignition switch OFF.
2. Check voltage between smart entrance control unit harness connector M90 terminal 1 (SB) and ground.

1 (SB) – Ground
When driver door is opened : Approx. 0 V
When driver door is closed : Approx. 12 V

OK or NG

OK >> Front door switch (driver side) is OK.
NG >> GO TO 2.

2. CHECK FRONT DOOR SWITCH (DRIVER SIDE)

1. Disconnect front door switch (driver side) connector.
2. Check continuity between front door switch (driver side) B16 terminals 2 and 3.

2 – 3

When door switch is released	**: Continuity should exist.**
When door switch is pushed	**: Continuity should not exist.**

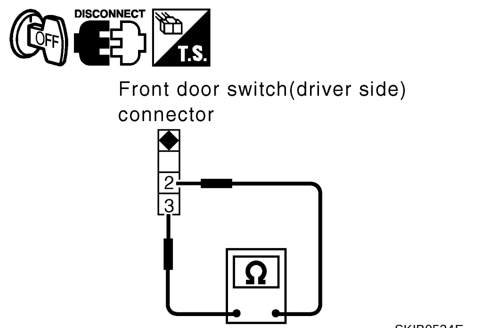

SKIB0534E

OK or NG

OK >> GO TO 3.
NG >> Replace front door switch (driver side).

3. CHECK FRONT DOOR SWITCH CIRCUIT

1. Disconnect smart entrance control unit connector.
2. Check continuity between smart entrance control unit harness connector M90 terminal 1 (SB) and front door switch (driver side) harness connector B16 terminal 2 (R).

1 (SB) – 2 (R) : Continuity should exist.

3. Check continuity between smart entrance control unit harness connector M90 terminal 1 (SB) and ground.

1 (SB) – Ground : Continuity should not exist.

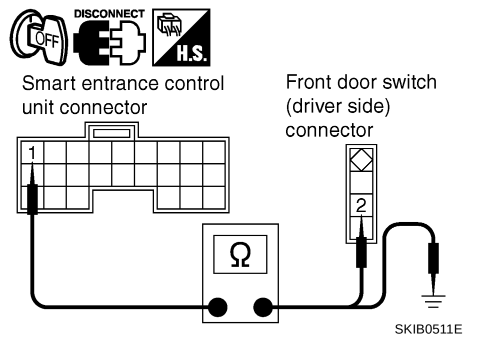

SKIB0511E

OK or NG

OK >> GO TO 4.
NG >> Repair harness or connector.

4. CHECK FRONT DOOR SWITCH GROUND CIRCUIT

Check continuity between front door switch (driver side) harness connector B16 terminal 3 (B) and ground.

3 (B) – Ground : Continuity should exist.

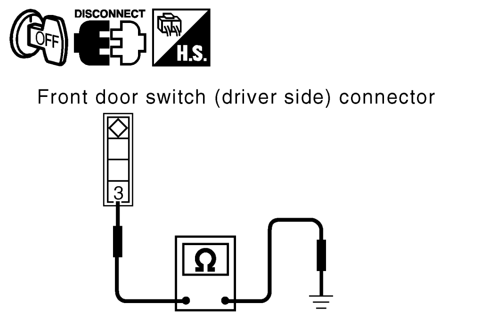

SKIB0610E

OK or NG

OK >> Replace smart entrance control unit.
NG >> Repair harness or connector.

Lighting Switch Input Signal Inspection

AKS00BBA

1. CHECK LIGHTING SWITCH INPUT SIGNAL

1. Turn ignition switch OFF.
2. Check voltage between smart entrance control unit harness connector M92 terminal 58 (R/L) and ground.

58 (R/L) – Ground

Lighting switch (1st or 2nd position) : Approx. 12 V

Lighting switch (OFF) : Approx. 0 V

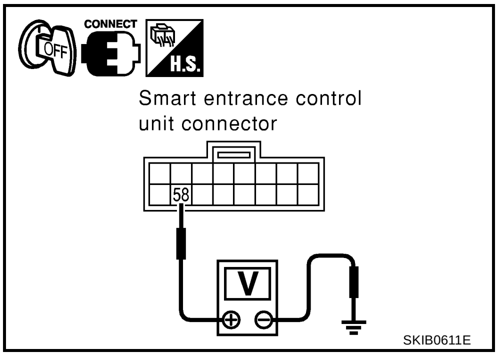

OK or NG

OK >> Lighting switch is OK.
NG >> GO TO 2.

2. CHECK LIGHTING SWITCH CIRCUIT

1. Disconnect smart entrance control unit connector and combination switch connector.
2. Check continuity between smart entrance control unit harness connector M92 terminal 58 (R/L) and combination switch harness connector E110 terminal 12 (R/L).

58 (R/L) – 12 (R/L) : Continuity should exist.

3. Check continuity between smart entrance control unit harness connector M92 terminal 58 (R/L) and ground.

58 (R/L) – Ground : Continuity should not exist.

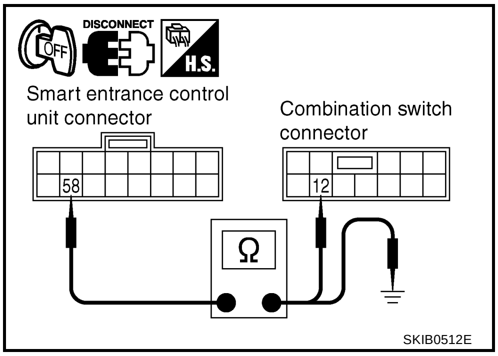

OK or NG

OK >> Check combination switch. Refer to LT-49, "COMBINATION SWITCH" .
NG >> Repair harness or connector.

Key Switch Insert Signal Inspection

AKS00BBB

1. CHECK FUSE

Check for blown key switch fuses. Refer to PG-51, "FUSE BLOCK - JUNCTION BOX (J/B)" .

Unit	Power source	Fuse No.
Key switch	Battery	28

OK or NG

OK >> GO TO 2.
NG >> If fuse is blown, be sure to eliminate cause of malfunction before installing new fuse.

2. CHECK KEY SWITCH INPUT SIGNAL

Check voltage between smart entrance control unit harness connector M91 terminal 25 (W/L) and ground.

25 (W/L) – Ground

When key is inserted to ignition key cylinder : Approx. 12 V

When key is removed from ignition key cylinder : Approx. 0 V

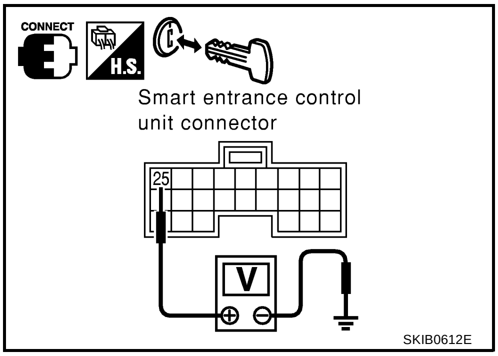

OK or NG

OK >> Key switch is OK.
NG >> GO TO 3.

3. CHECK KEY SWITCH (INSERT)

1. Disconnect key switch connector.
2. Check continuity between key switch connector M9 terminals 1 and 2.

1 – 2

When key is inserted to ignition key cylinder	**: Continuity should exist.**
When key is removed from ignition key cylinder	**: Continuity should not exist.**

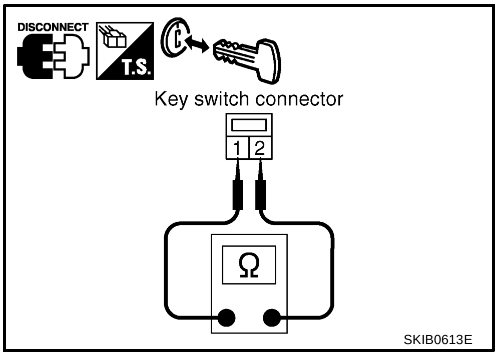

OK or NG

OK >> GO TO 4.
NG >> Replace key switch.

4. CHECK KEY SWITCH CIRCUIT

1. Disconnect smart entrance control unit connector.
2. Check continuity between smart entrance control unit harness connector M91 terminal 25 (W/L) and key switch harness connector M9 terminal 2 (W/L).

25 (W/L) – 2 (W/L) : Continuity should exist.

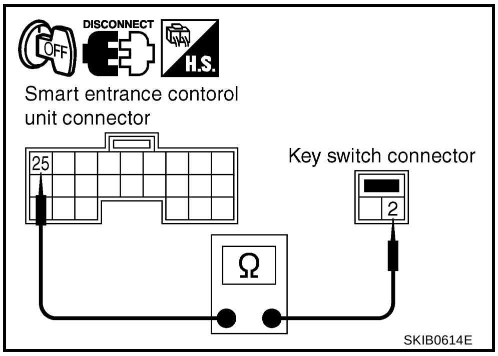

OK or NG

OK >> Check continuity open between key switch and fuse.
NG >> Repair harness or connector.

Seat Belt Buckle Switch Input Signal Inspection [Without Power Seat]

AKS00BQK

1. CHECK SEAT BELT BUCKLE SWITCH INPUT SIGNAL

1. Turn ignition switch ON.
2. Check voltage between smart entrance control unit harness connector M91 terminal 28 (BR/W) and ground.

28 (BR/W) – Ground

When seat belt is fastened	**: Approx. 12 V**
When seat belt is unfastened	**: Approx. 0 V**

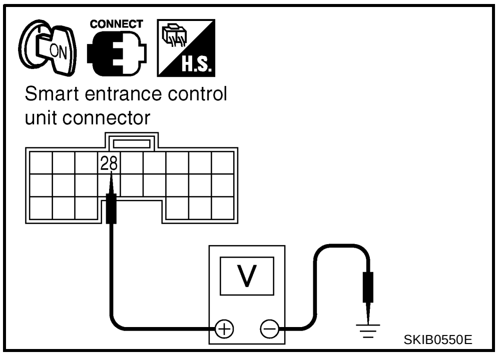

OK or NG

OK >> Seat belt buckle switch is OK.
NG >> GO TO 2.

2. CHECK SEAT BELT BUCKLE SWITCH

1. Turn ignition switch OFF.
2. Disconnect seat belt buckle switch (driver side) connector.
3. Check continuity seat belt buckle switch (driver side) connector terminals 1 and 2.

1 – 2

When seat belt is fastened : Continuity should not exist.

When seat belt is unfastened : Continuity should exist.

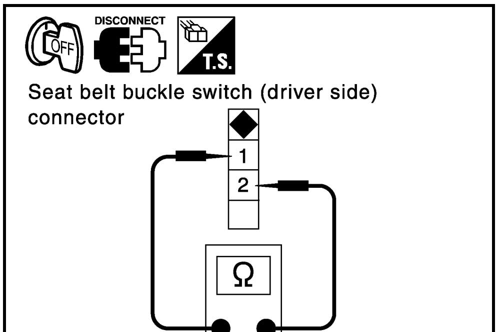

SKIB0677E

OK or NG

OK >> GO TO 3.
NG >> Replace seat belt buckle switch (driver side).

3. CHECK SEAT BELT BUCKLE SWITCH CIRCUIT

1. Disconnect smart entrance control unit connector.
2. Check continuity between smart entrance control unit harness connector M91 terminal 28 (BR/W) and seat belt buckle switch (driver side) harness connector B10 terminal 1 (BR/W).

28 (BR/W) – 1 (BR/W) : Continuity should exist.

3. Check continuity between smart entrance control unit harness connector M91 terminal 28 (BR/W) and ground.

28 (BR/W) – Ground : Continuity should not exist.

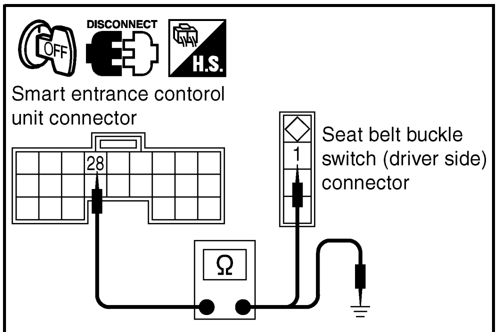

SKIB0551E

OK or NG

OK >> GO TO 4.
NG >> Repair harness or connector.

4. CHECK SEAT BELT BUCKLE SWITCH GROUND CIRCUIT

Check continuity between seat belt buckle switch (driver side) harness connector B10 terminal 2 (B) and ground.

2 (B) – Ground : Continuity should exist.

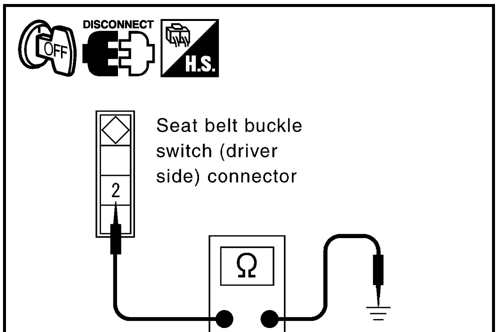

SKIB0615E

OK or NG

OK >> Replace smart entrance control unit.
NG >> Repair harness or connector.

Seat Belt Buckle Switch Input Signal Inspection [With Power Seat]

AKS00BQL

1. CHECK SEAT BELT BUCKLE SWITCH INPUT SIGNAL

1. Turn ignition switch ON.
2. Check voltage between smart entrance control unit harness connector M91 terminal 28 (BR/W) and ground.

28 (BR/W) – Ground

When seat belt is fastened	**: Approx. 12 V**
When seat belt is unfastened	**: Approx. 0 V**

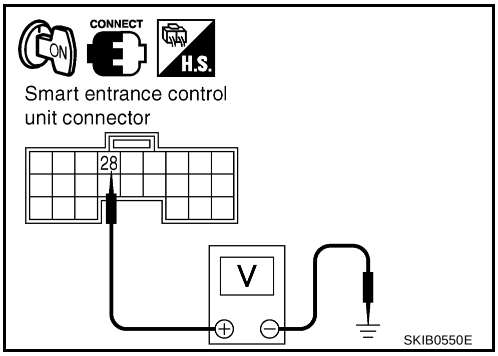

OK or NG

OK >> Seat belt buckle switch is OK.
NG >> GO TO 2.

2. CHECK SEAT BELT BUCKLE SWITCH

1. Turn ignition switch OFF.
2. Disconnect seat belt buckle switch (driver side) connector.
3. Check continuity seat belt buckle switch (driver side) connector terminals 13 and 14.

13 – 14

When seat belt is fastened	**: Continuity should not exist.**
When seat belt is unfastened	**: Continuity should exist.**

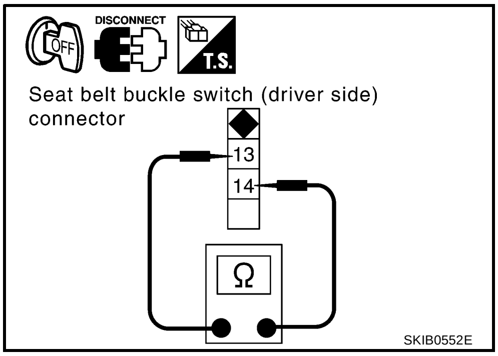

OK or NG

OK >> GO TO 3.
NG >> Replace seat belt buckle switch (driver side).

3. CHECK SEAT BELT BUCKLE SWITCH CIRCUIT

1. Disconnect smart entrance control unit connector.
2. Check continuity between smart entrance control unit harness connector M91 terminal 28 (BR/W) and seat belt buckle switch (driver side) harness connector B302 terminal 13 (R).

28 (BR/W) – 13 (R) : Continuity should exist.

3. Check continuity between smart entrance control unit harness connector M91 terminal 28 (BR/W) and ground.

28 (BR/W) – Ground : Continuity should not exist.

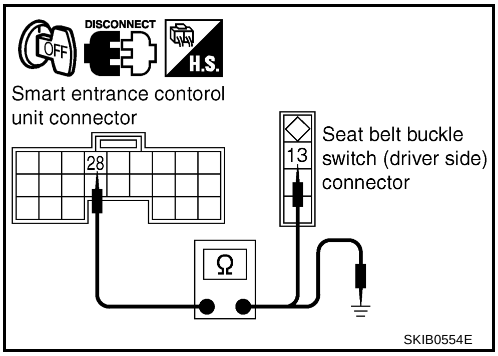

OK or NG

OK >> GO TO 4.
NG >> Repair harness or connector.

4. CHECK SEAT BELT BUCKLE SWITCH GROUND CIRCUIT

Check continuity between seat belt buckle switch (driver side) harness connector B302 terminal 14 (OR) and ground.

14 (OR) – Ground : Continuity should exist.

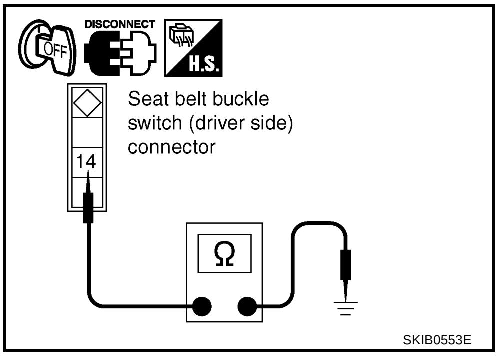

OK or NG

OK >> Replace smart entrance control unit.
NG >> Repair harness or connector.

CAN COMMUNICATION

PFP:23710

System Description

AKS00FC4

CAN (Controller Area Network) is a serial communication line for real time application. It is an on-vehicle multiplex communication line with high data communication speed and excellent error detection ability. Many electronic control units are equipped onto a vehicle, and each control unit shares information and links with other control units during operation (not independent). In CAN communication, control units are connected with 2 communication lines (CAN H line, CAN L line) allowing a high rate of information transmission with less wiring. Each control unit transmits/receives data but selectively reads required data only.

CAN Communication Unit

AKS00FC5

Refer to LAN-21, "CAN Communication Unit" in “LAN SYSTEM”.

CLOCK

PFP:25820

Wiring Diagram — CLOCK —

AKS00BBC

DI-CLOCK-01

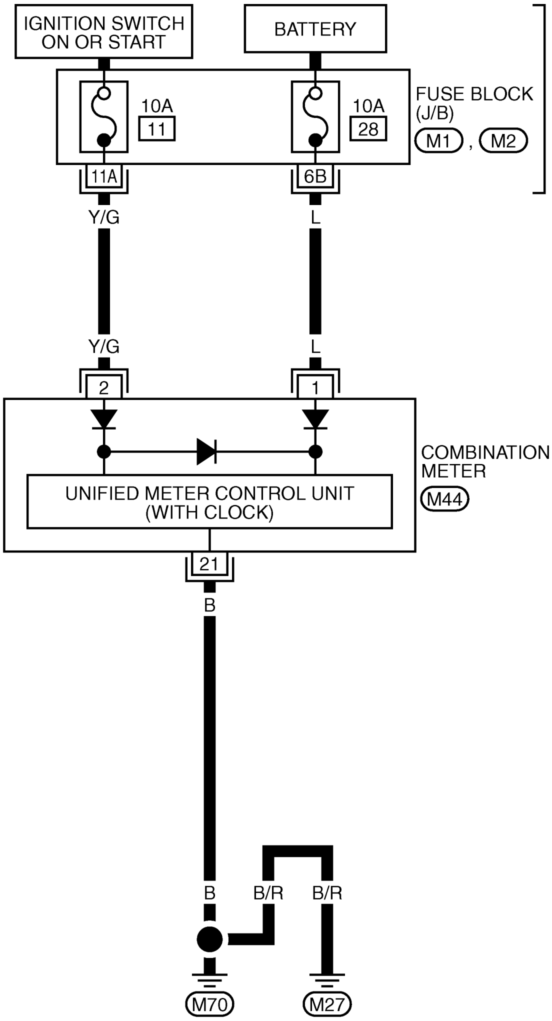

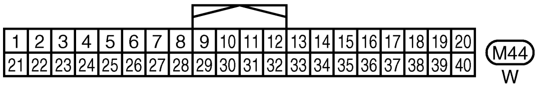

REFER TO THE FOLLOWING.
M1 , M2 -FUSE BLOCK-JUNCTION BOX (J/B)

TKWA1859E